CEDRAL

Cedral Lap Horizontal

Construction Details

New Zealand

Table of contents

General information

This document provides generic construction details for Cedral Lap façade systems to assist with the design of Cedral Lap façade.

Construction details in this document have been independently certified for the purpose of compliance with Clause E2, External moisture, of the New Zealand Building Code within the scope of E2/VM1.

The weatherproofing performance of any project specific detail or application that is different from or not included in the construction details of this document shall be evaluated by the project engineer or consultant.

It is the responsibility of the project designer, architect and engineer to ensure that the information and construction details provided in this document are appropriate for the intended application.

Cladding support frame and its connection to substructure shall be designed by the project engineer in accordance with the relevant standards. The support frame maximum deflection under the influence of load shall be limited to Span/250.

The support frame, fixings, flashings and the like shall be of adequate corrosion resistance appropriate to the corrosivity category of the project location.

Non-proprietary flashings and capping shall be designed with respect to project wind loading, relevant standards and regulations.

This document is not designed to serve as an installation guide, and is intended to be used in conjunction with other relevant technical and installation documents.

Construction details contained in this document are not to a specific scale, and are for illustration purposes only.

The information in this document is correct at the time of issuing. However, due to our committed program of continuous material and system development we reserve the right to amend or alter the information contained therein without prior notice. Please contact your local Cedral sales organisation to ensure you have the most current version.

Ventilated facade

Cedral Lap and Click are designed for a ventilated façade system.

A ventilated façade is a kind of two stage construction, an inner structure with a protective outer skin, and the cladding panel or rainscreen. A ventilated façade consists of an insulated and weathertight structure, a ventilated cavity formed with a cladding support frame, and the cladding panel.

Allowance for adequate ventilation is paramount in ensuring a successful Cedral façade. Ventilated façades provide a number of added benefits to the building and its occupants. These may include but are not limited to the following:

- Positive contribution to energy savings
- Minimises thermal bridges
- Assists with condensation management
- Reduces thermal movement of the structure and cladding support frame
- Dissipates radiant heat
- Increases acoustic performance of the external wall
- Provides an effective drainage path for any moisture passing the cladding skin
- Eliminates the need for exposed caulking and sealant, therefore reducing maintenance requirements
- Assists with keeping the weather barrier dry and healthy
- Provides opportunities for concealing external services such as downpipes within the cavity
- Proven to be a more sustainable and healthier façade construction
- Architectural design freedom

Air must be allowed to enter the cavity from bottom of the façade, window head, soffit, slab junctions, and the like, and exit from top of the façade, capping, window sill, slab and soffit interfaces, and the like.

All air inlets and outlets shall be protected against entry of birds and vermin into the cavity with a corrosion resistant perforated profile (angle).

The perforated angle should be of maximum 0.9mm in thickness, where placed between the cladding panel and support frame, and be of a minimum 50% open area with aperture size of maximum 3mm to 5mm. The perforations must be kept open and unobstructed to maintain drainage and ventilation of the cavity. The perforated angle shall be positioned to allow an adequate drip edge to the cladding panel.

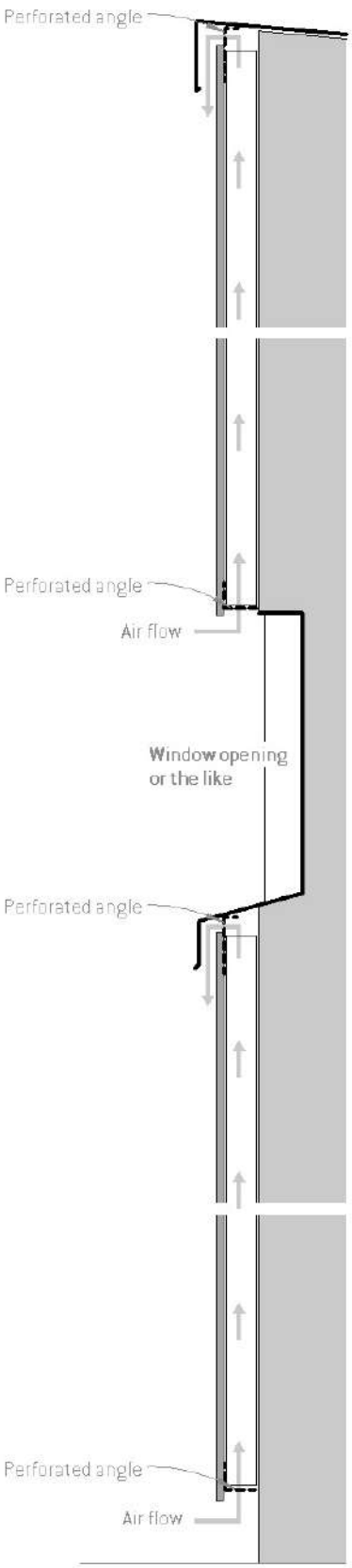

General components

CEDRAL LAP WOOD

CEDRAL LAP SMOOTH

Cedral Lap is supplied in a range of 22 factory applied colours and two wood stain finishes, providing an aesthetic option to suit most project requirements. Refer to https://www.cedral.world/en-nz/cladding/ for all available colours and finishes. Bespoke colours are subject to minimum order quantities and extended lead times.

CEDRAL LAP profiles

Starter profile

Symmetrical external corner profile

Asymmetrical external corner profile

External corner junction (connector) profile

General components

Internal corner profile

End profile

EPDM strip

0,75mm flat EPDM strip 100mm wide.

Applied on timber cavity battens for moisture protection as specified on the construction details

EPDM compressible gasket

Tesa® 61102

A compressible closed-cell EPDM gasket used for sealing interfaces with flashings and the like
Minimum width: 9mm.

Expanding foam gasket

pro clima CONTEGA® FIDEN EXO

A pre-compressed sealing tape used to seal interfaces with window joineries and the like as specified on the construction details.

The required tape size depends on the gap which needs to be sealed. Refer to pro clima CONTEGA® FIDEN EXO datasheet to determine the required tape size.

Weather resistive barrier option 1

pro clima SOLITEX EXTASANA®

Cedral façade systems have been certified with pro clima SOLITEX EXTASANA® to E2/VM1 for the purpose of compliance with Clause E2 of the NZBC for the following scope:

- Serviceability wind pressure: Up to ±1515Pa
- Ultimate wind pressure: Up to ±2500Pa
- Building height: Up to 10m

pro clima SOLITEX EXTASANA® shall be applied in accordance with pro clima SOLITEX EXTASANA® installation guidelines and relevant standards.

General components

Weather resistive barrier option 2
pro clima SOLITEX EXTASANA® AHERO

Where a rigid air barrier is required the ADHERO version of pro clima SOLITEX EXTASANA® may be used with 6mm Kalsi (RigidBacker) fibre cement sheeting.
pro clima SOLITEX EXTASANA® AHERO and Kalsi shall be applied in accordance with their respective installation guidelines and recommendations. Same wind pressure and building height limits as those of Option 1 apply unless otherwise specified by project engineer.

Flashing tape
pro clima TESCON EXTORA®

A pressure sensitive adhesive tape for overlaps and end laps used with both weather resistive barrier options.

Sill tape
pro clima TESCON EXTOSEAL®

A flexible tape for use around window and door openings, used with both weather resistive barrier options.

Sealing tape
pro clima TESCON® NAIDECK mono patch

A single-sided adhesive nail or screw sealing adhesive used with both weather resistive barrier options.

Foil tape
pro clima TESCON® ADHISO WS

A pure aluminium tape for wet seal connections to TESCON EXTOSEAL® and EXTORA® and SOLITEX EXTASANA®.

Grommet
pro clima ROFLEX and KALFEX

pro clima ROFLEX is used to seal pipe and pro clima KAFLEX for cable penetrations. pro clima ROFLEX and KALFEX are used with both weather resistive barrier options.

CEDRAL

Cedral Lap Horizonal
With Timber Batten Construction

Fixings and support frame

CEDRAL LAP Horizontal with timber batten construction

Cedral Lap may be fixed horizontally in traditional lapped style to vertical timber battens

Cedral Lap nail for nail fixing Cedral Lap to timber batten
(2.8 x 45 mm, head diameter ~6 mm, flat head, ribbed shaft, stainless steel 304)

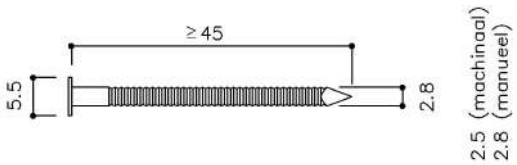

Cedral Lap countersunk timber screw for screw fixing Cedral Lap to timber batten
(4.2 x 45 mm, head diameter ~ 7,5 mm, drill point, countersunk head with milling ribs, square drive n°2, stainless steel 304)

Cedral Lap colour matched mushroom head screw for fixing Cedral Lap to timber batten where fixings are visible
(4.8 x 38 mm, head diameter ~12 mm, TORX T20, stainless steel 304)

Support frame

Cedral Lap may be fixed to vertical timber battens with minimum depth of 35mm and width of 70mm (35 x 70 mm).

Timber battens shall be of minimum preservative treatment of H3.1, and of minimum structural grade of SG6 as per the relevant standards.

Maximum deflection of support framing must be limited to Span/250. Structure and support frame shall be designed to relevant standards including, but not limited to, the following:

- AS/NZS 4600 – Cold-formed steel structures
- NZS 3404 – Steel structures
- NZS 3604 – Timber framed buildings

Construction details

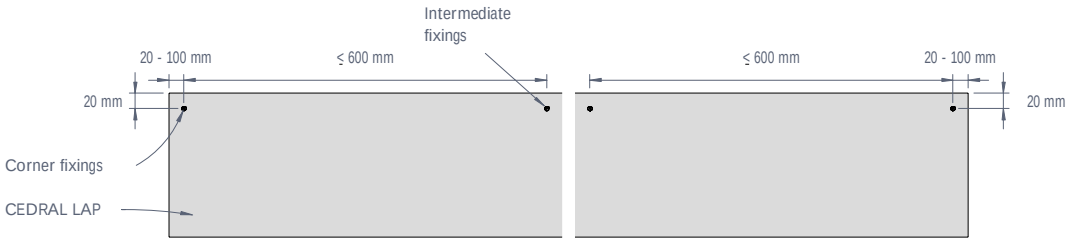

Figure 1: CEDRAL LAP fixings arrangement - Elevation

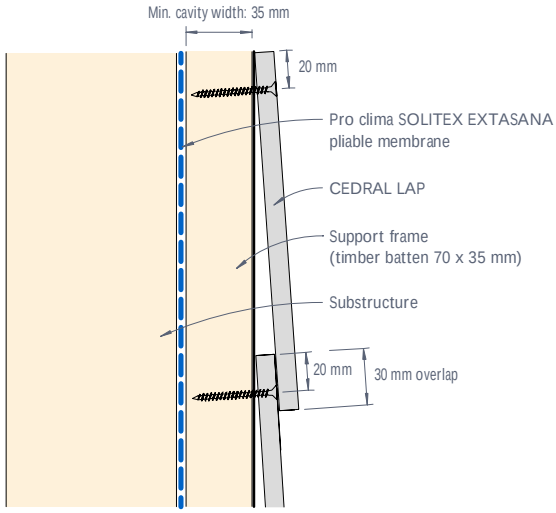

Figure 2: CEDRAL LAP typical section

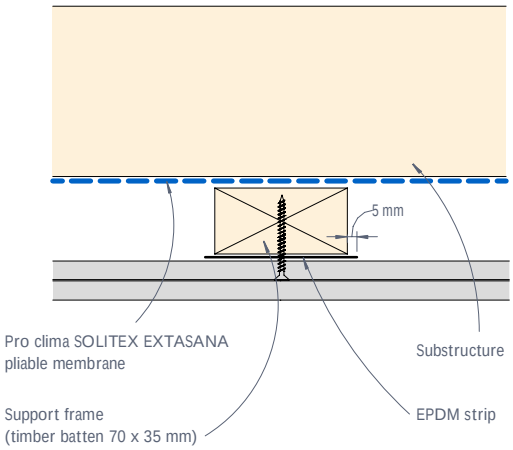

Figure 3: CEDRAL LAP Intermediate fixing detail - Plan view

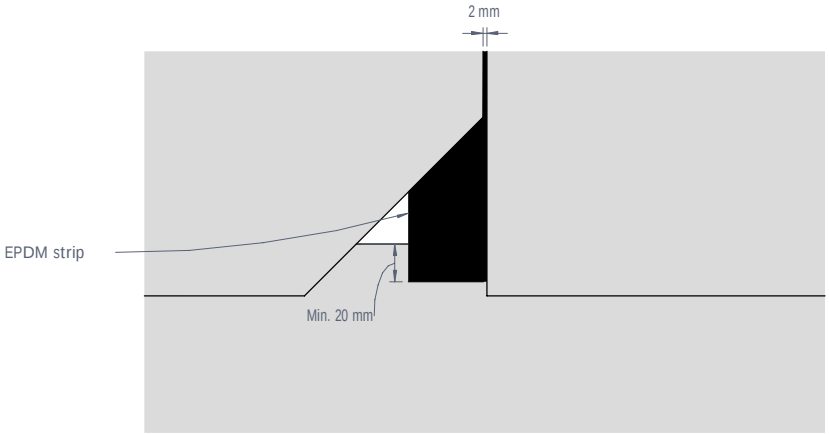

Figure 4: CEDRAL LAP vertical joint - Elevation

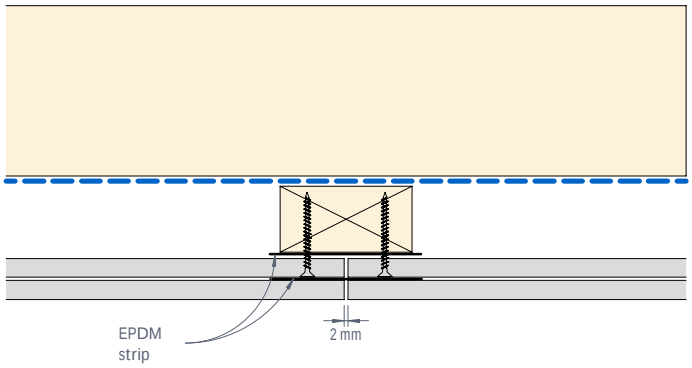

Figure 5: CEDRAL LAP Vertical joint - Plan view

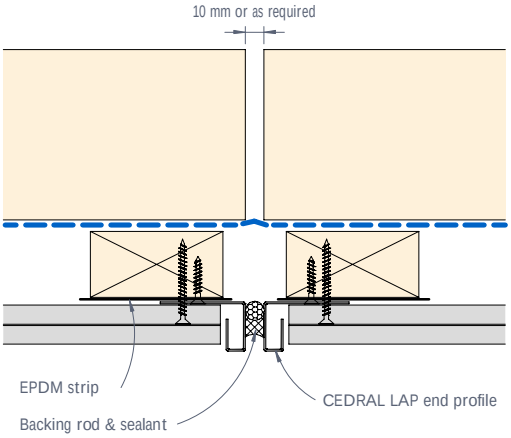

Figure 6: CEDRAL LAP vertical joint - Detail 1

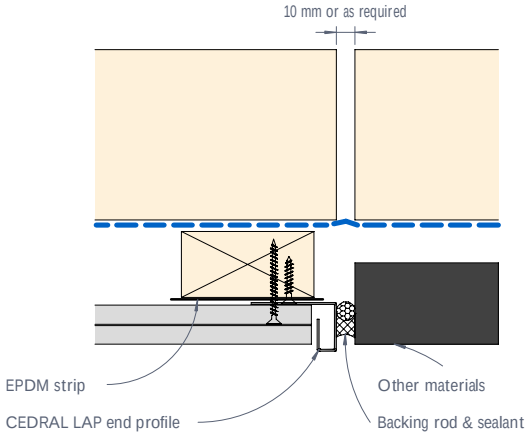

Figure 7: CEDRAL LAP vertical joint - Detail 2

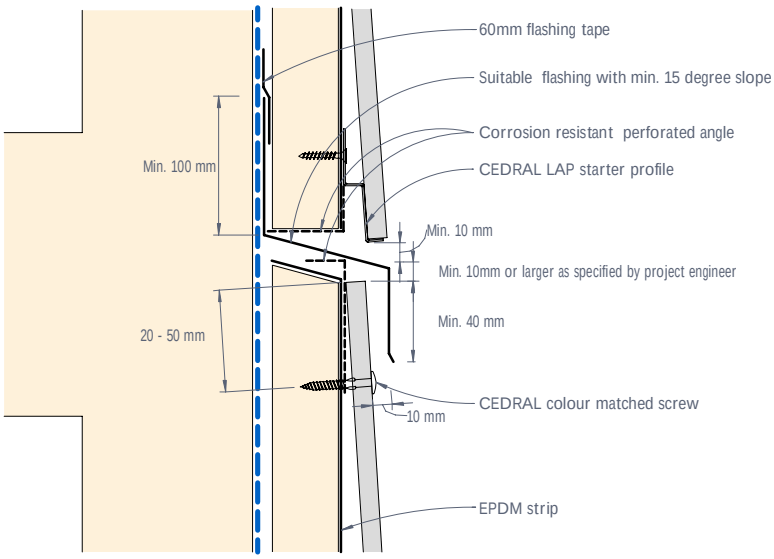

Figure 8: CEDRAL LAP horizontal control joint and inter-storey detail

Notes

1) Support frame (battens) must NOT be fixed crossing over a control joint.

2) Corrosion resistant perforated angle shall be of max. thickness of 0.9mm where located between panel and support frame, and be of min. 50% open area.

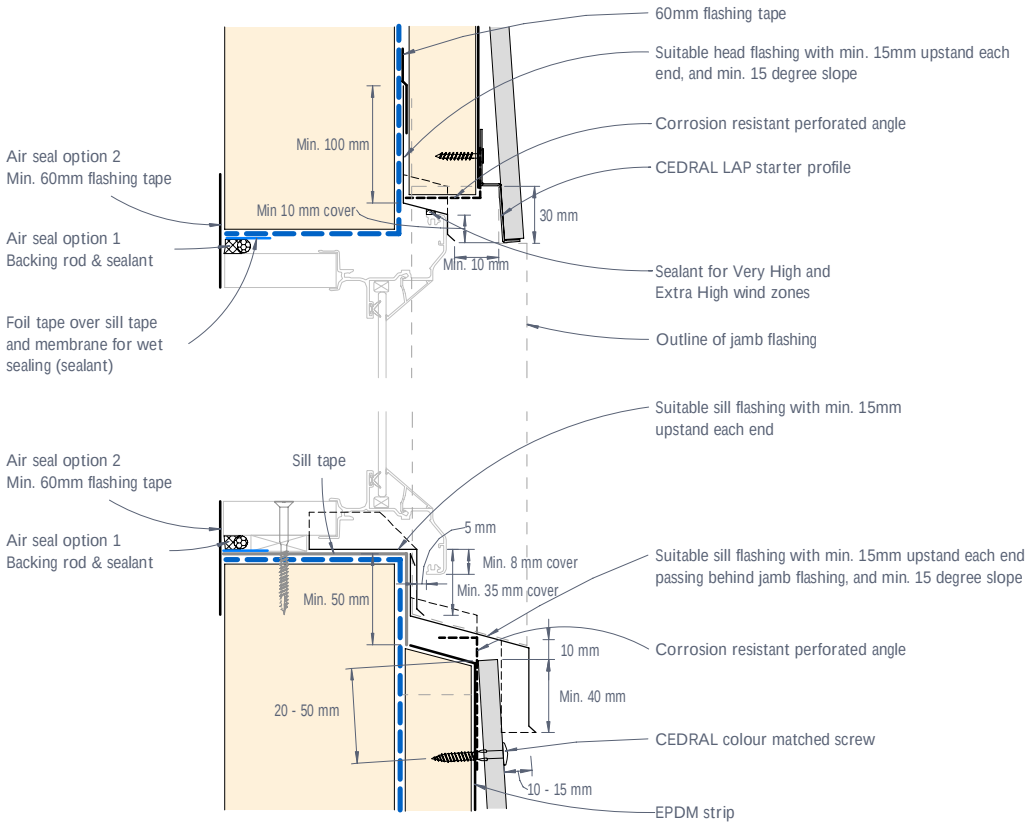

Figure 9: CEDRAL LAP window head and sill junction with CEDRAL starter profile at the head

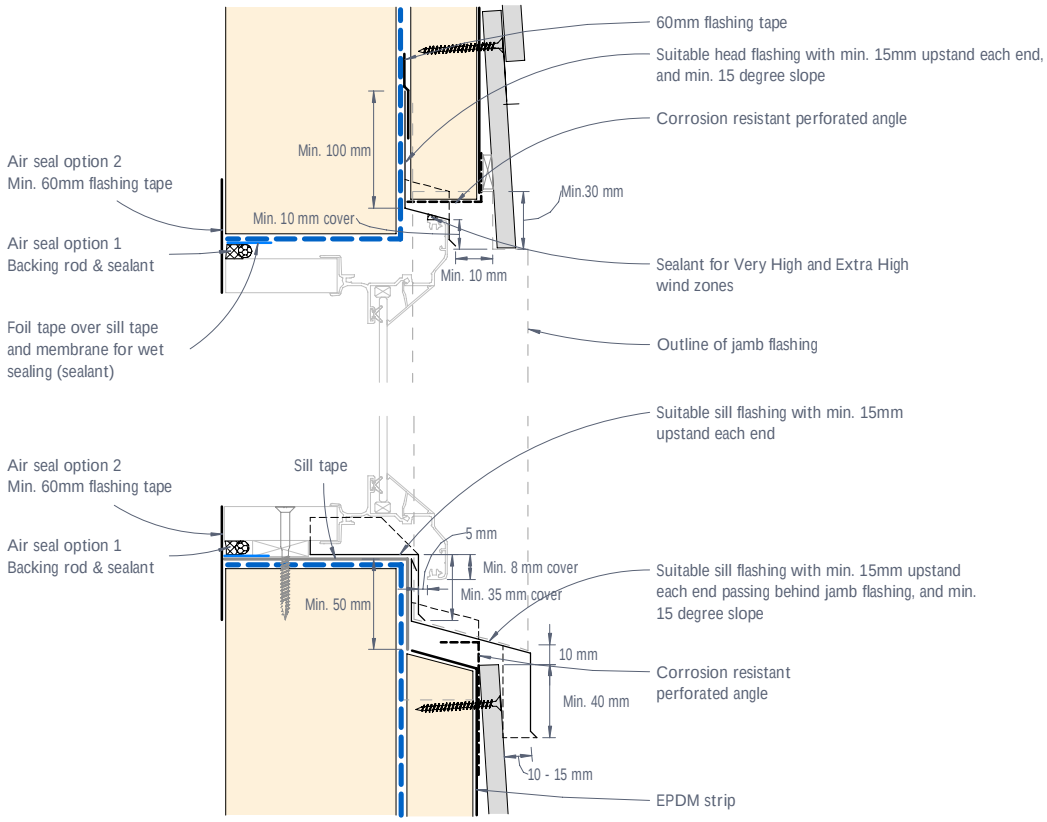

Figure 10: CEDRAL LAP window head and sill junction without CEDRAL starter profile at the head

Note

1) ONLY sealant compatible with the foil tape should be used. Should any sealant be intended to be used directly on the flashing and/or sill tape it must be confirmed with its manufacturer to ensure compatibility with these tapes in accordance with the relevant standards.

2) Corrosion resistant perforated angle shall be of max. thickness of 0.9mm where located between panel and support frame, and be of min. 50% open area.

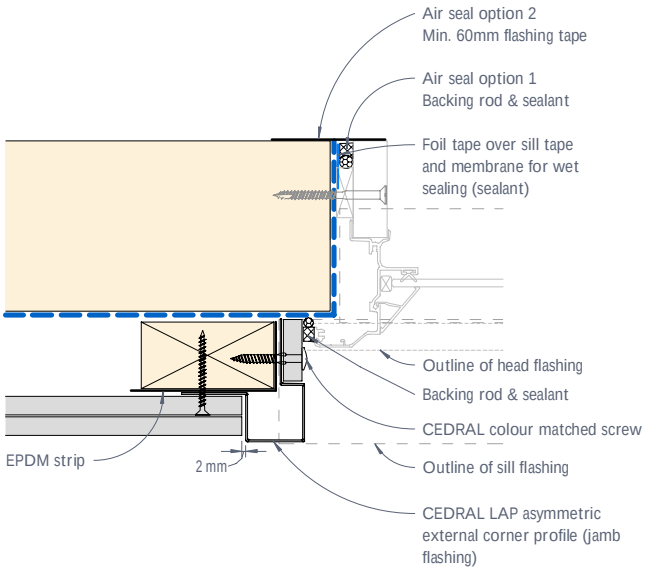

Figure 10: CEDRAL LAP window jamb junction or the like - Detail 1

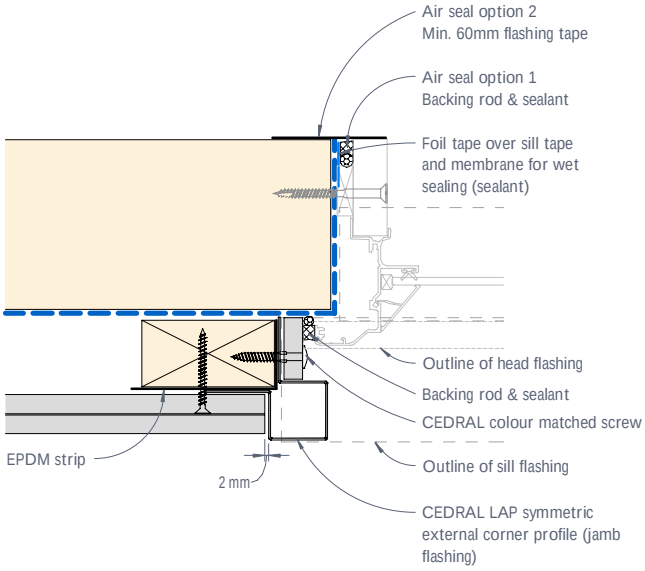

Figure 11: CEDRAL LAP window jamb junction or the like - Detail 2

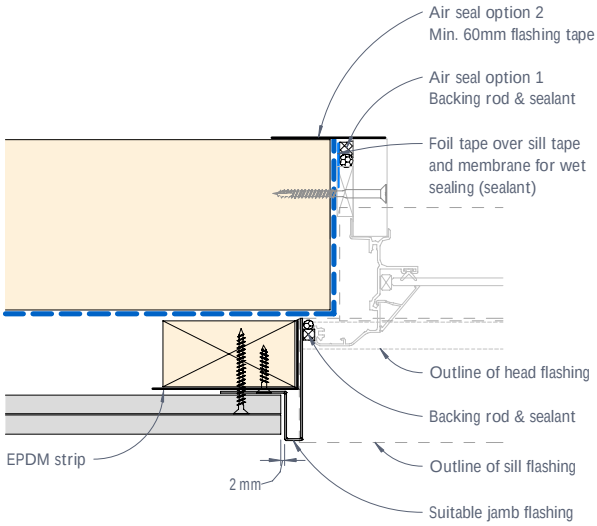

Figure 12: CEDRAL LAP window jamb junction or the like - Detail 3

Note

ONLY sealant compatible with the foil tape should be used. Should any sealant be intended to be used directly on the flashing and/or sill tape it must be confirmed with its manufacturer to ensure compatibility with these tapes in accordance with the relevant standards.

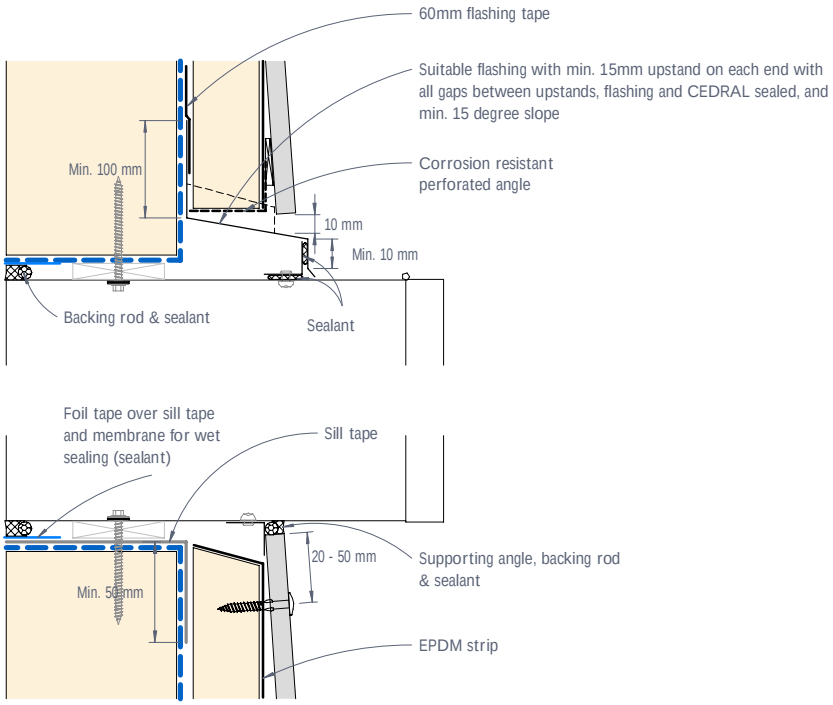

Figure 13: CEDRAL LAP meter box junction - Section

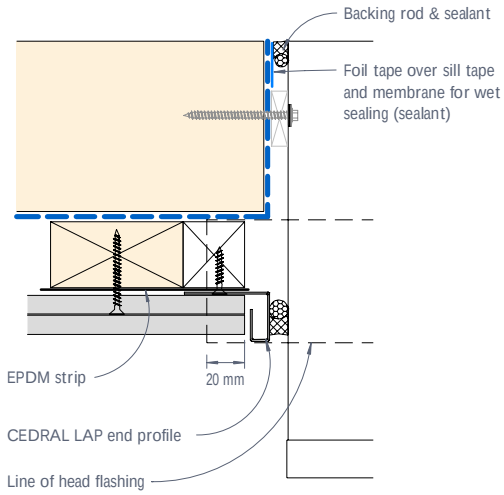

Figure 14: CEDRAL LAP meter box junction - Plan view

Notes

1) ONLY sealant compatible with the foil tape should be used. Should any sealant be intended to be used directly on the flashing and/or sill tape it must be confirmed with its manufacturer to ensure compatibility with these tapes in accordance with the relevant standards.

2) Corrosion resistant perforated angle shall be of max. thickness of 0.9mm where located between panel and support frame, and be of min. 50% open area.

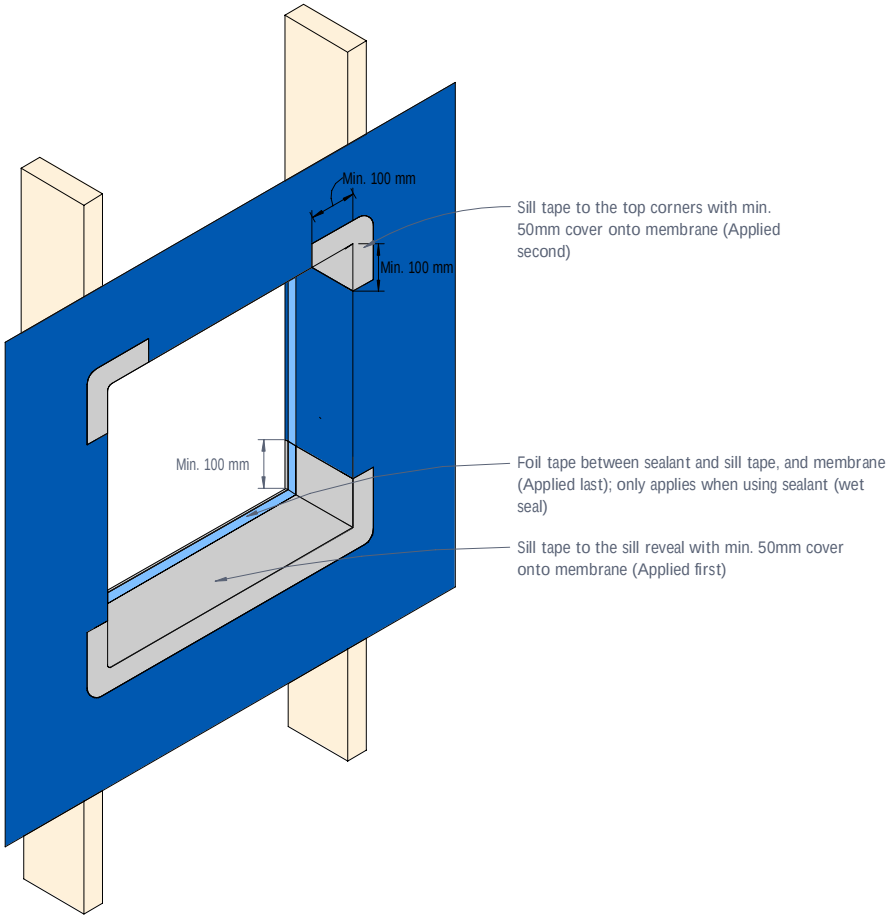

Figure 15: Isometric view of window/meter box opening - Tape application

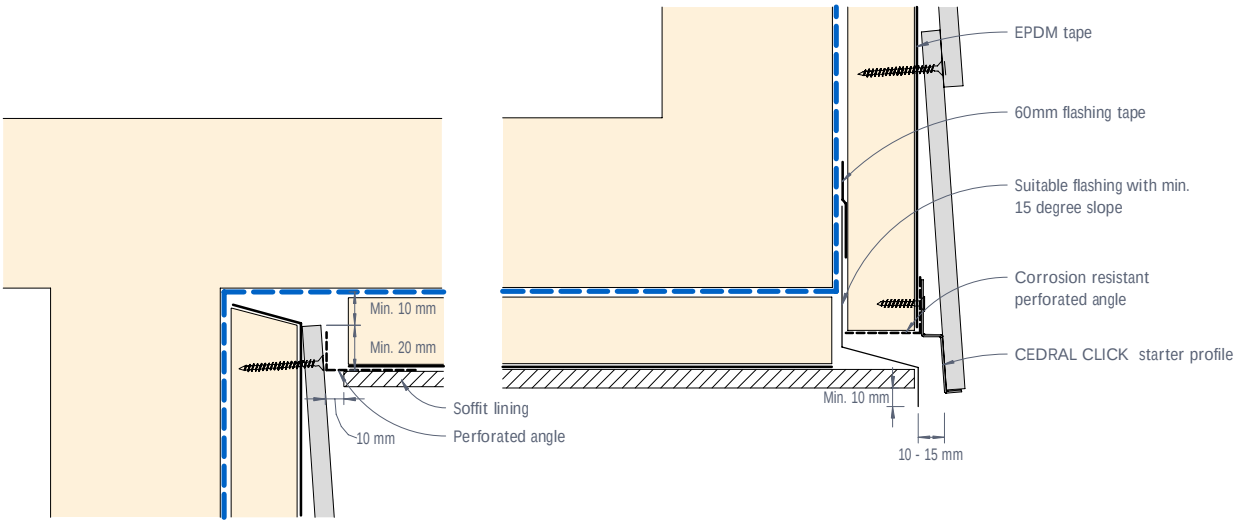

Figure 16: CEDRAL LAP soffit junction

Notes

1) ONLY sealant compatible with the foil tape should be used. Should any sealant be intended to be used directly on the flashing and/or sill tape it must be confirmed with its manufacturer to ensure compatibility with these tapes in accordance with the relevant standards.

2) Support frame (battens) must NOT be fixed crossing over a control joint.

3) Corrosion resistant perforated angle shall be of max. thickness of 0.9mm where located between panel and support frame, and be of min. 50% open area.

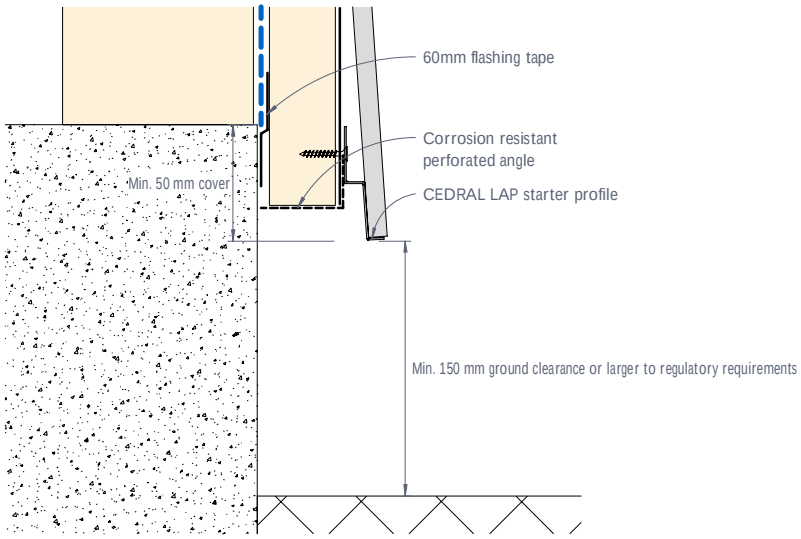

Figure 17: CEDRAL LAP base detail

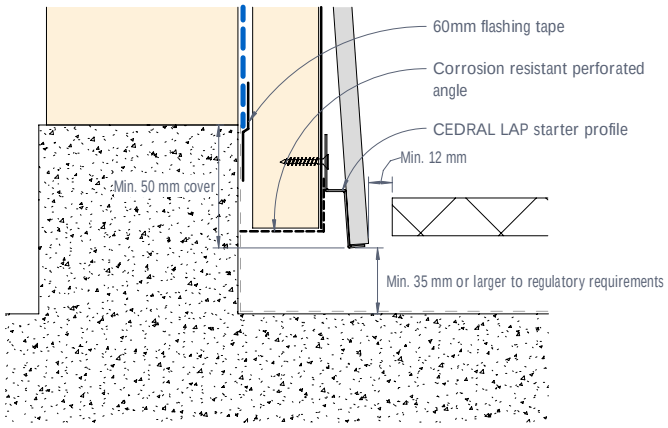

Figure 18: CEDRAL LAP base detail - Covered area

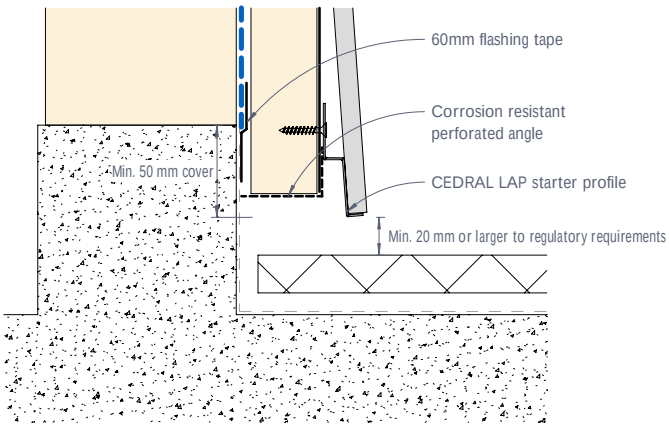

Figure 19: CEDRAL LAP base detail - Balcony

Notes

1) Corrosion resistant perforated angle shall be of max. thickness of 0.9mm where located between panel and support frame, and be of min. 50% open area.

2) Refer to pro clima's application guide for the application of the flashing tape and any pre-treatment required on various substrates including concrete and masonry.

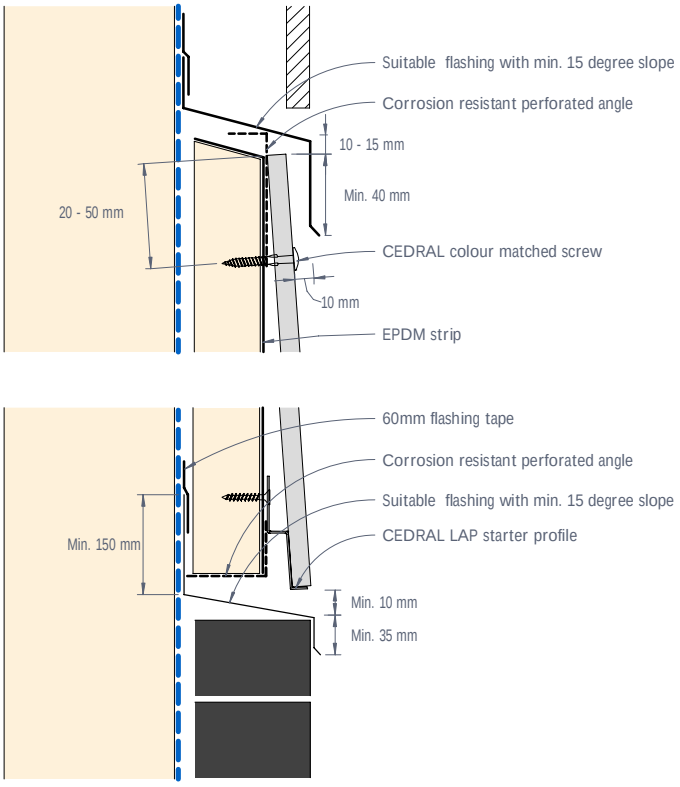

Figure 20: CEDRAL LAP junction with other materials - Flush detail

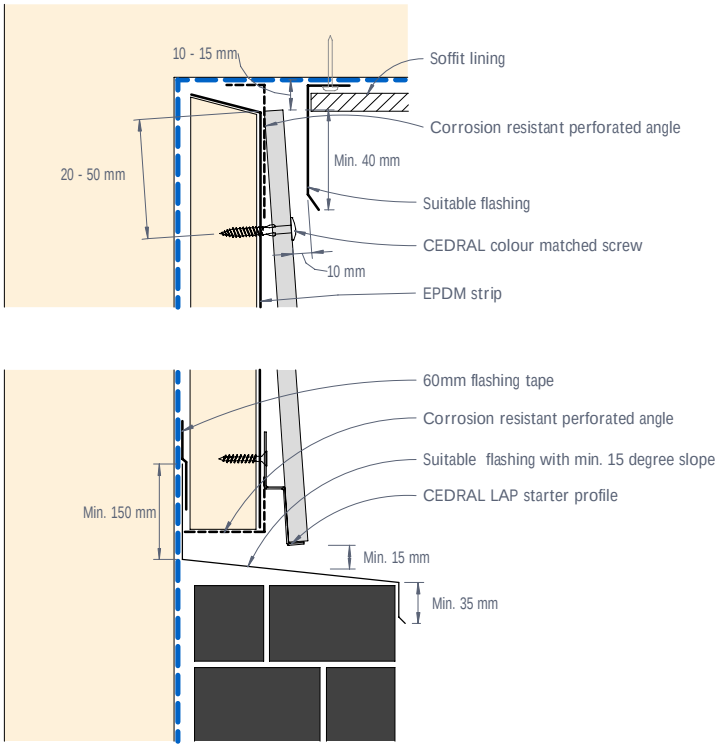

Figure 21: CEDRAL LAP junction with other materials, eaves or the like - Recessed detail

Notes

1) Support frame (battens) must NOT be fixed crossing over a control joint.

2) Corrosion resistant perforated angle shall be of max. thickness of 0.9mm where located between panel and support frame, and be of min. 50% open area.

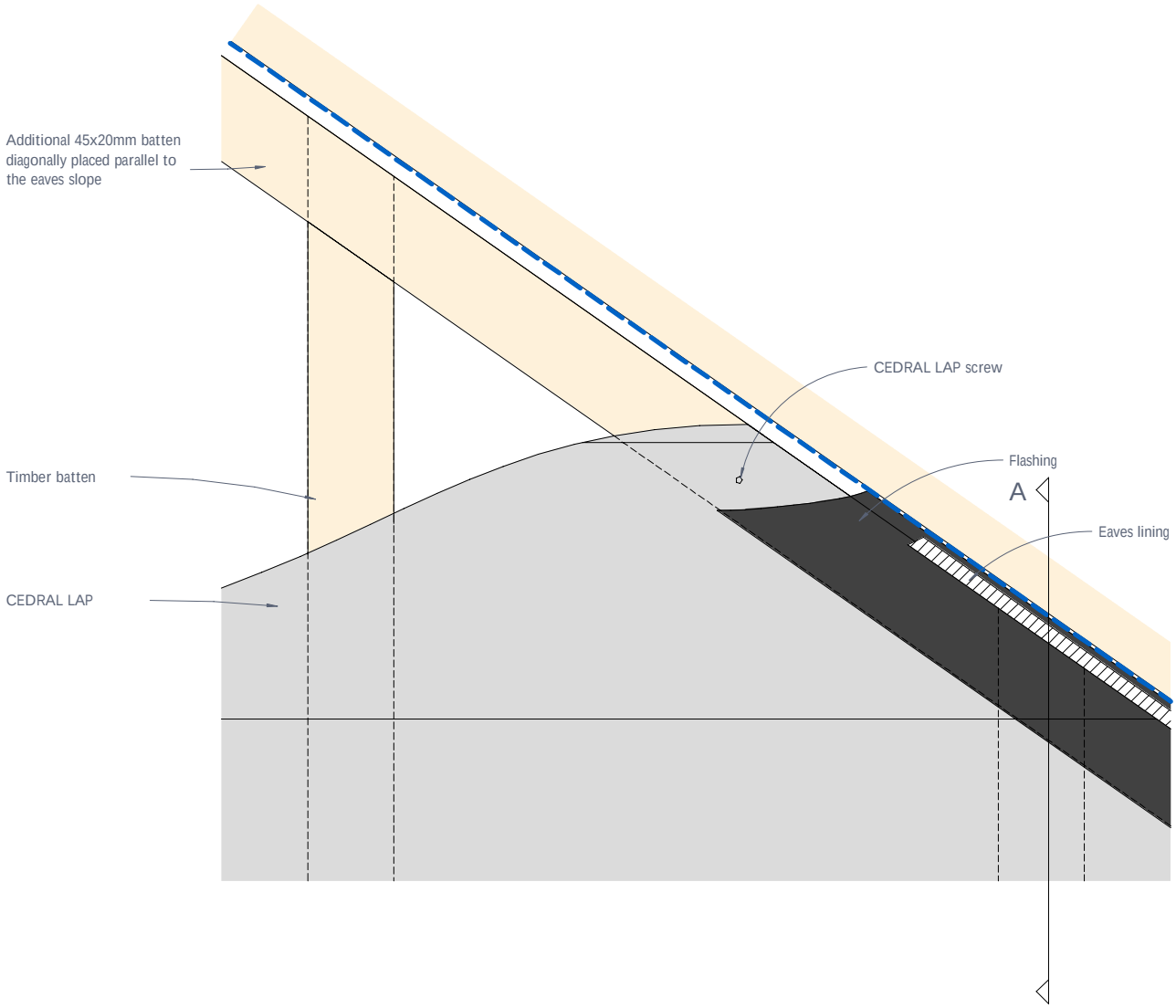

Figure 22: CEDRAL LAP junction with angled eave - Elevation

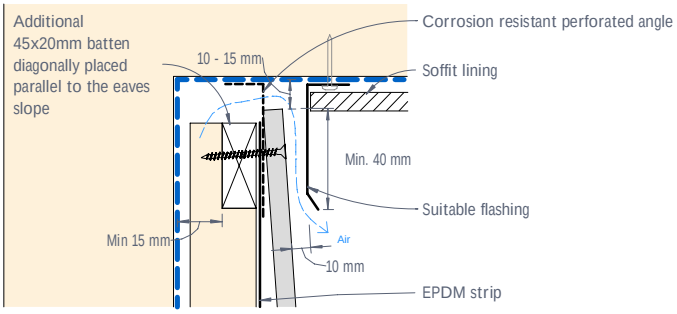

Figure 23: CEDRAL LAP junction with angled eave - Section A

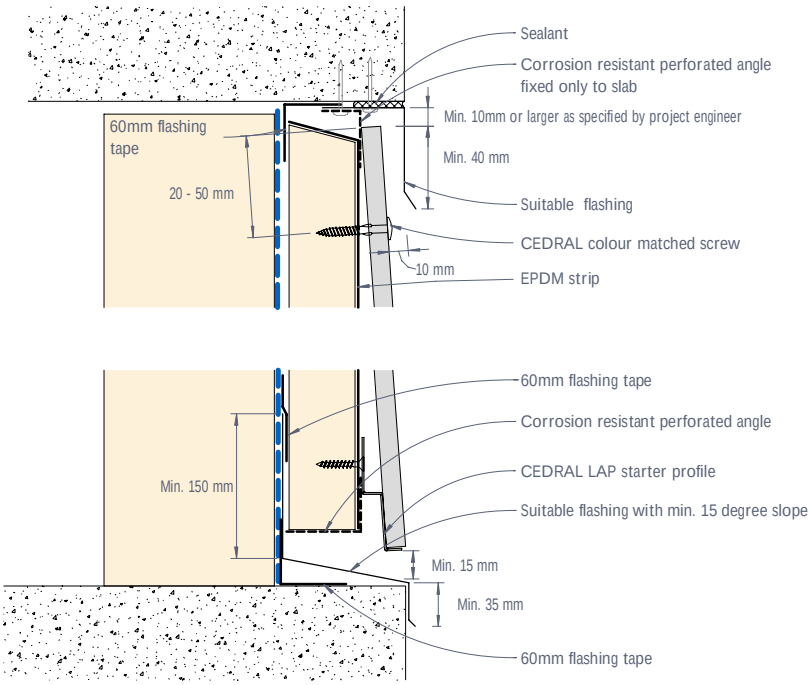

Figure 24: CEDRAL LAP junction with exposed concrete slab or beam - Cladding flush

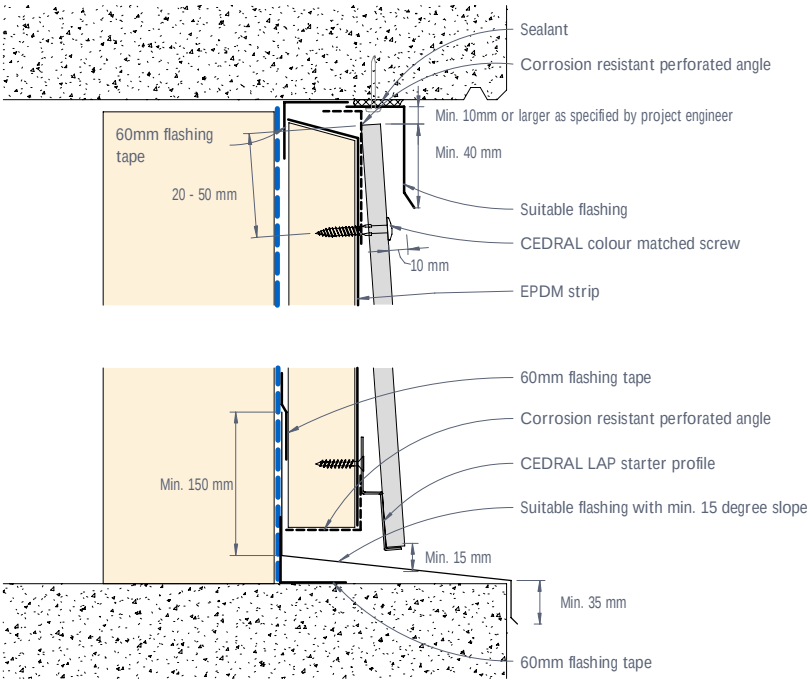

Figure 25: CEDRAL LAP junction with exposed concrete slab or beam - Cladding recessed

Notes

1) Support frame (battens) must NOT be fixed crossing over a control joint.

2) Corrosion resistant perforated angle shall be of max. thickness of 0.9mm where located between panel and support frame, and be of min. 50% open area.

3) Refer to pro clima's application guide for the application of the flashing tape and any pre-treatment required on various substrates including concrete and masonry.

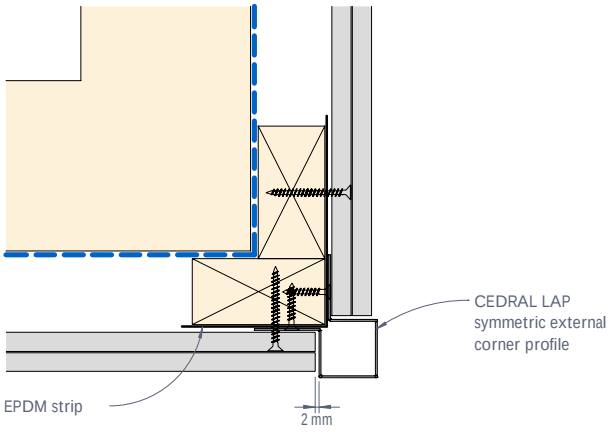

Figure 26: CEDRAL LAP typical external corner

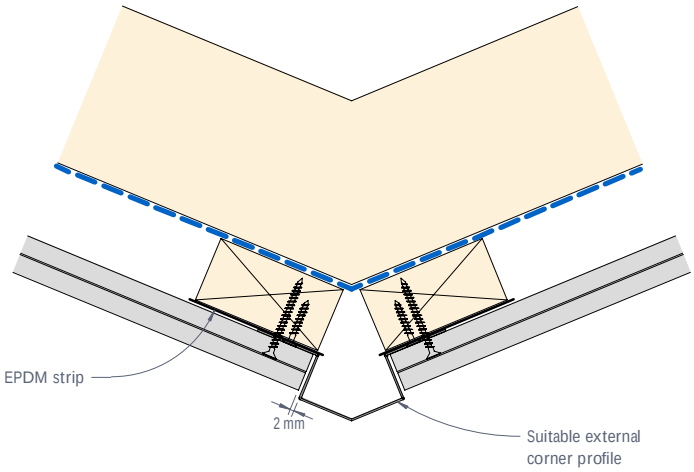

Figure 27: CEDRAL LAP 45 degree external corner

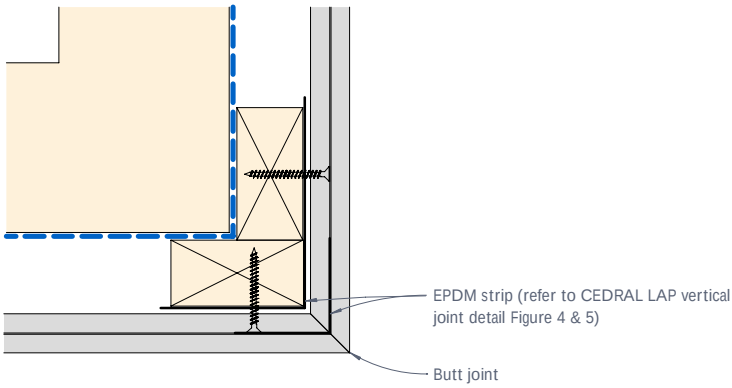

Figure 28: CEDRAL LAP mitered external corner

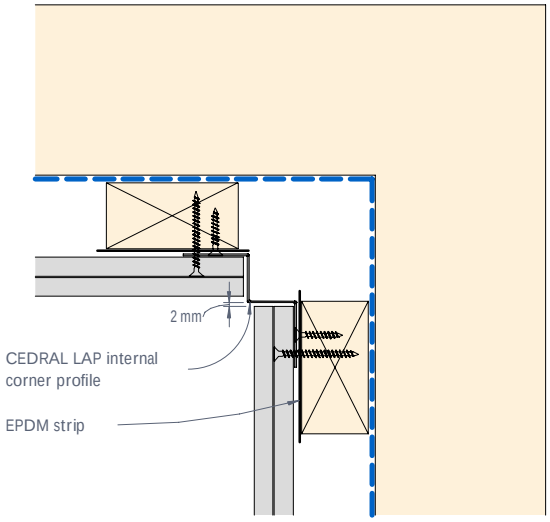

Figure 29: CEDRAL LAP internal corner

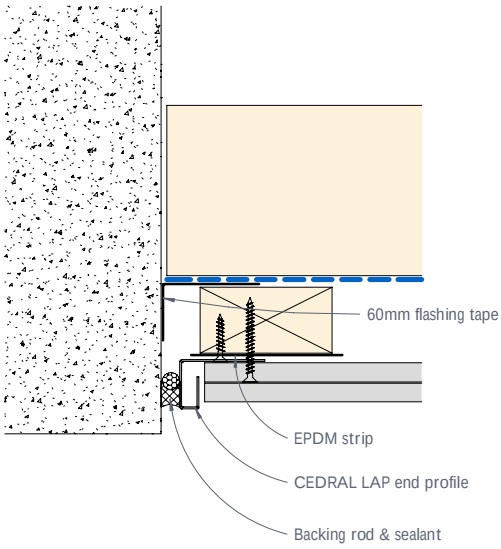

Figure 30: CEDRAL LAP abutment detail

Note

Refer to pro clima's application guide for the application of the flashing tape and any pre-treatment required on various substrates including concrete and masonry.

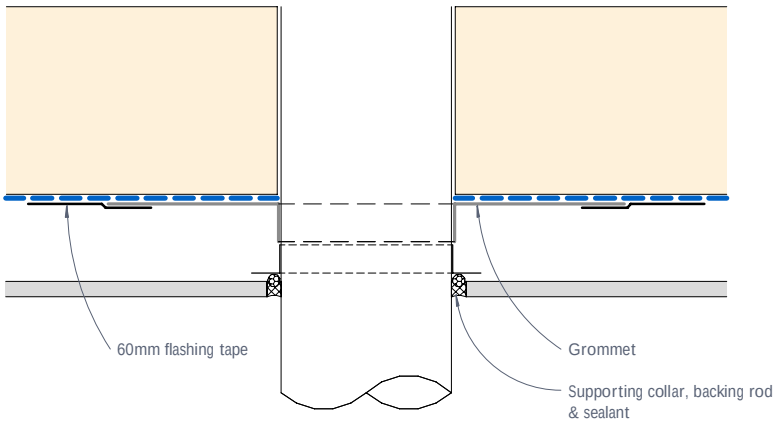

Figure 31: Pipe penetration - Plan view

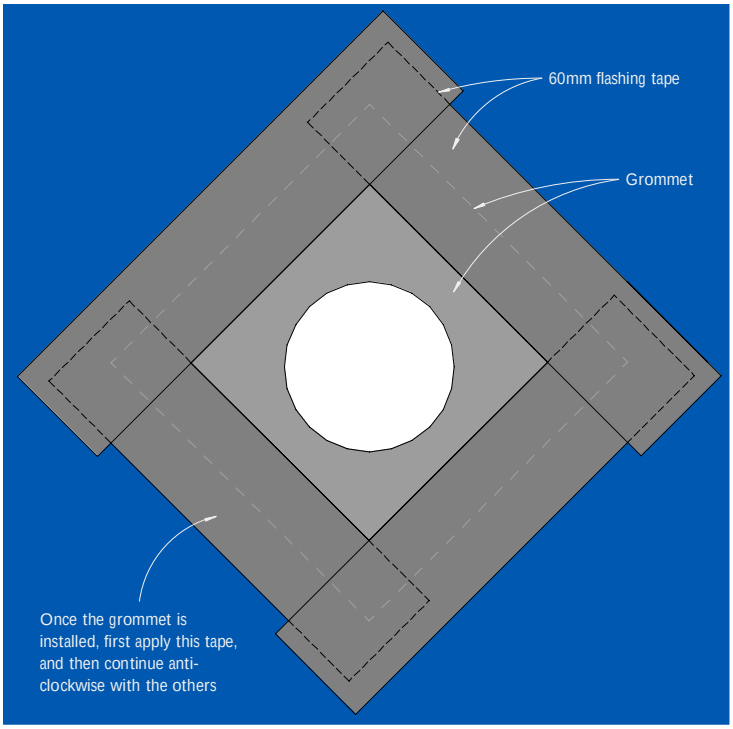

Figure 32: Pipe penetration - Elevation

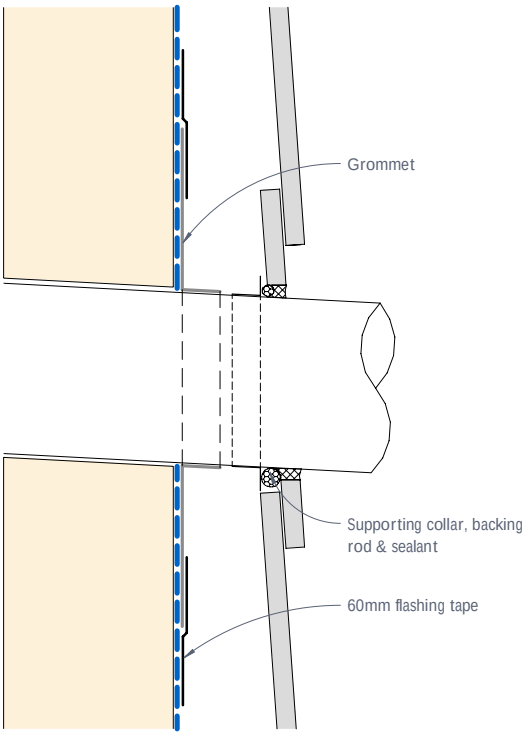

Figure 33: Pipe penetration - Section

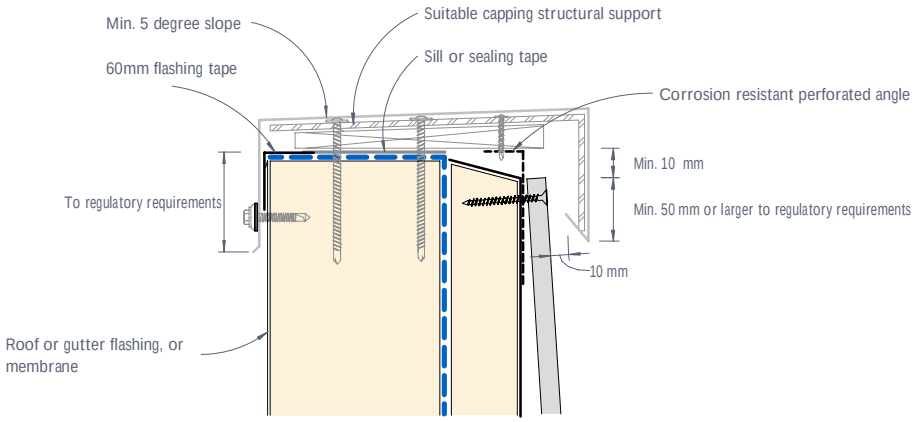

Figure 34: CEDRAL LAP typical capping detail

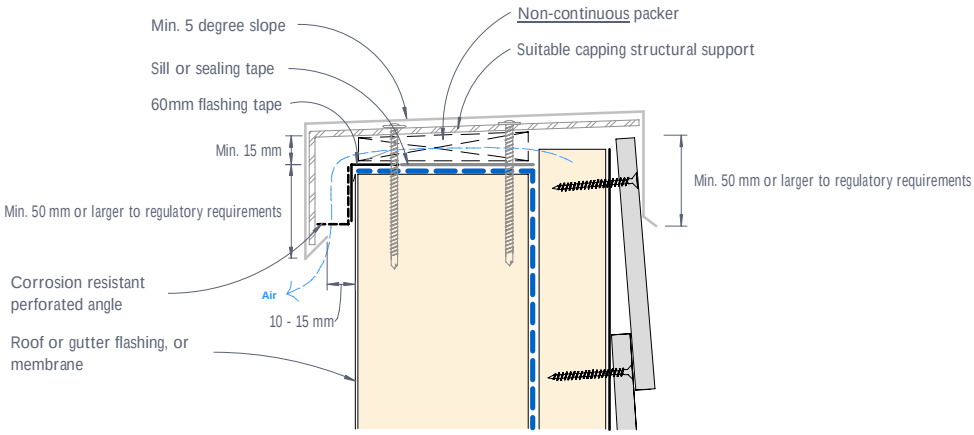

Figure 35: CEDRAL LAP flush capping detail

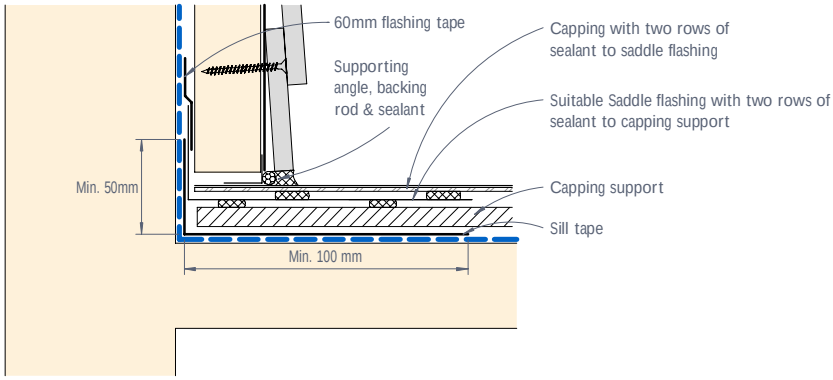

Figure 36: CEDRAL LAP parapet junction - Section

Notes

1) Capping profiles are indicative and for illustration purposes.

2) Any face fixings of capping shall be through an over sized hole (by min 5mm) in the capping as well as the panel.

3) Capping shall be designed and engineered accordingly to provide adequate allowance for ventilation as shown in Figures 34 & 35.

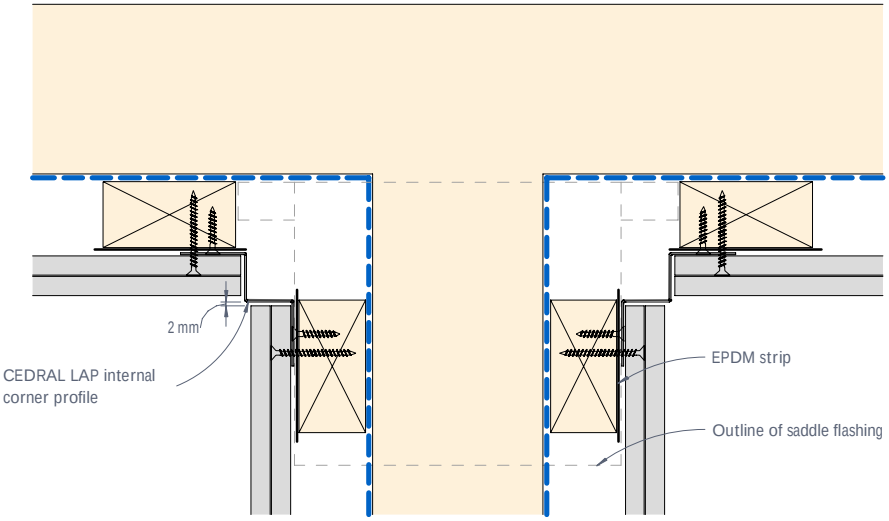

Figure 37: Parapet junction - Plan view

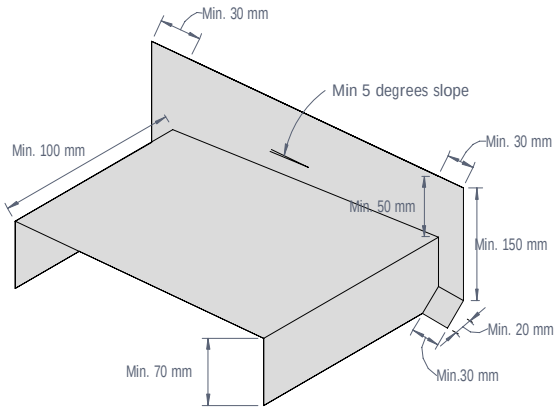

Figure 38: Suitable saddle flashing

CEDRAL

Cedral Lap Horizontal
With Top Hat Construction

Fixings and support frame

CEDRAL LAP Horizontal with metal top hat construction

Cedral Lap may be fixed horizontally in traditional lapped style to metal top hat support frame.

Fixings

Cedral metal screw for fixing Cedral Lap to metal support frame
(4.5 x 32 mm, head diameter ~7 mm, drill point, Phillips n°2, stainless steel 304)

Support frame

Cedral Lap may be fixed to vertical metal top hat profiles with minimum gauge (thickness) of 1.1mm BMT, minimum depth of 35mm, and minimum width of 40mm and 70mm for intermediate and joint profiles, respectively.

Metal top hats shall be of adequate corrosion resistance required for the project.

Maximum deflection of support framing must be limited to Span/250. Structure and support frame shall be designed to relevant standards including, but not limited to, the following:

- AS/NZS 4600 – Cold-formed steel structures
- NZS 3404 – Steel structures
- NZS 3604 – Timber framed buildings

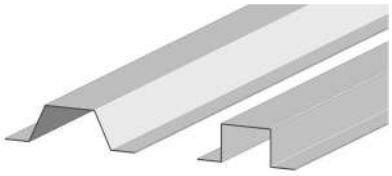

Examples of standard top hat sections

Intermediate top hat's minimum size

Joint top hat's minimum size

Construction details

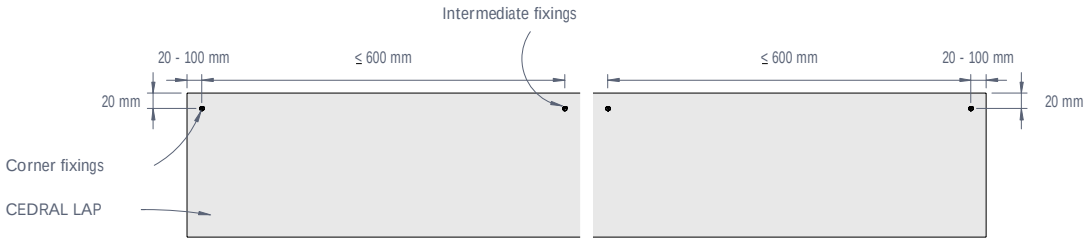

Figure 1: CEDRAL LAP fixings arrangement - Elevation

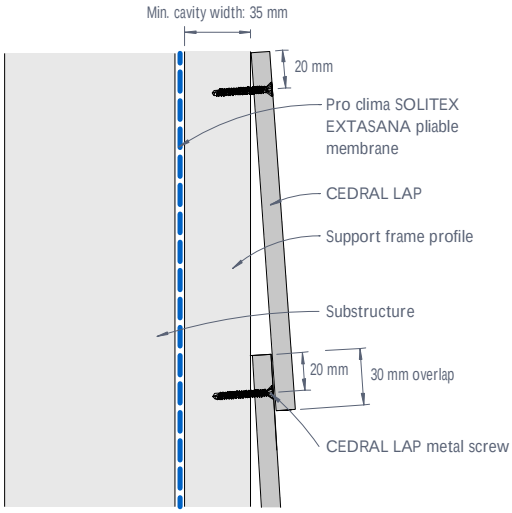

Figure 2: CEDRAL LAP typical section

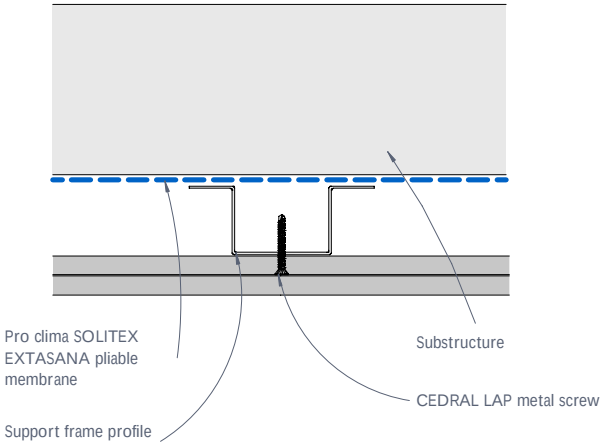

Figure 3: CEDRAL LAP Intermediate fixing detail - Plan view

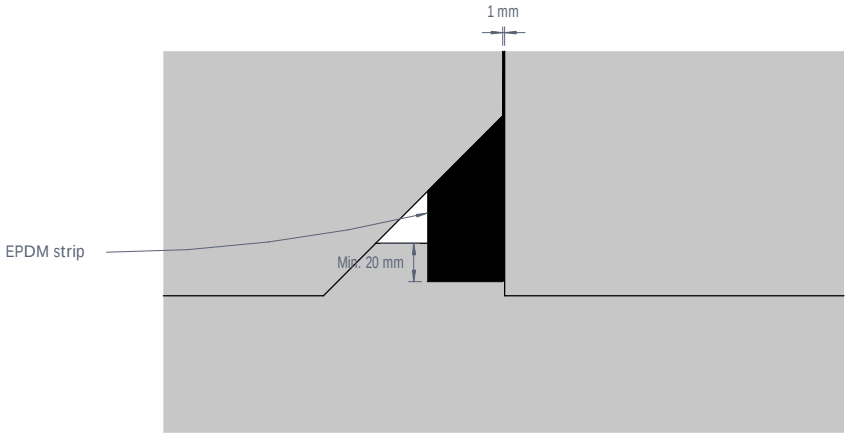

Figure 4: CEDRAL LAP vertical joint - Elevation

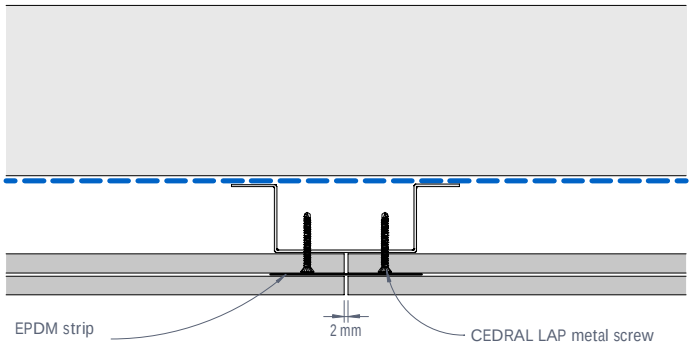

Figure 5: CEDRAL LAP Vertical joint - Plan view

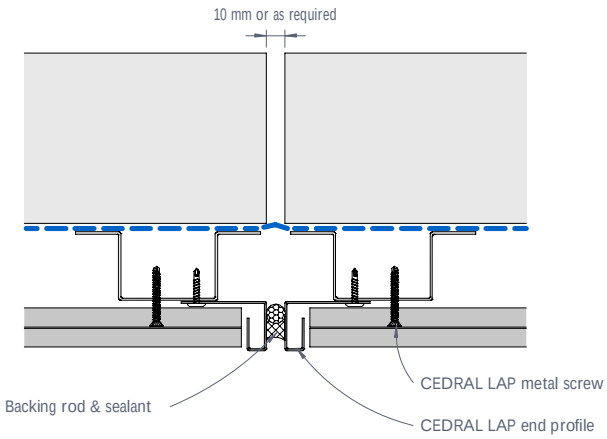

Figure 6: CEDRAL LAP vertical joint - Detail 1

Note

Where a support frame profile accommodates two adjacent CEDRAL LAP planks (Figure 5) it should be of a minimum 70mm width; therefore , a standard 75 X 35mm (minimum 1.15mm BMT) top hat may be used where the panel vertical joint is located. For intermediate support, a 50 X 35mm top hat of minimum 1.15mm BMT may be applied.

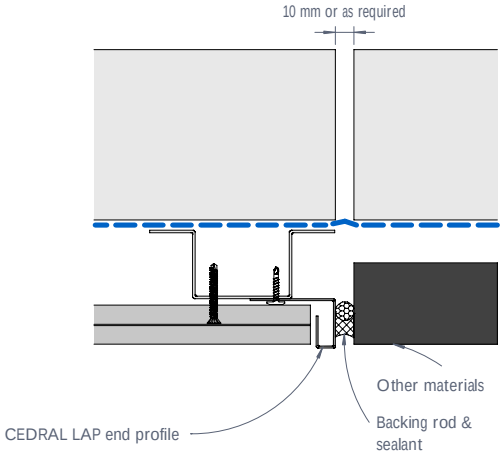

Figure 7: CEDRAL LAP vertical joint - Detail 2

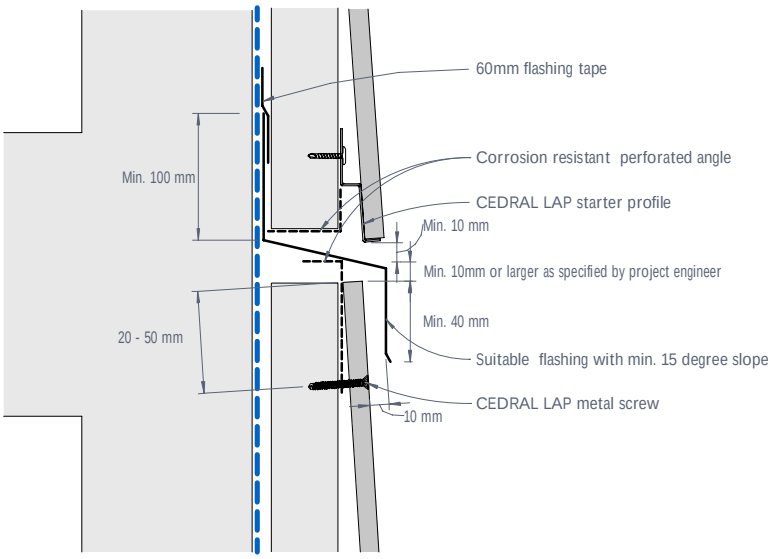

Figure 8: CEDRAL LAP horizontal
control joint and inter-storey detail

Notes

1) Support frame (battens) must NOT be fixed crossing over a control joint.

2) Corrosion resistant perforated angle shall be of max. thickness of 0.9mm where located between panel and support frame, and be of min. 50% open area.

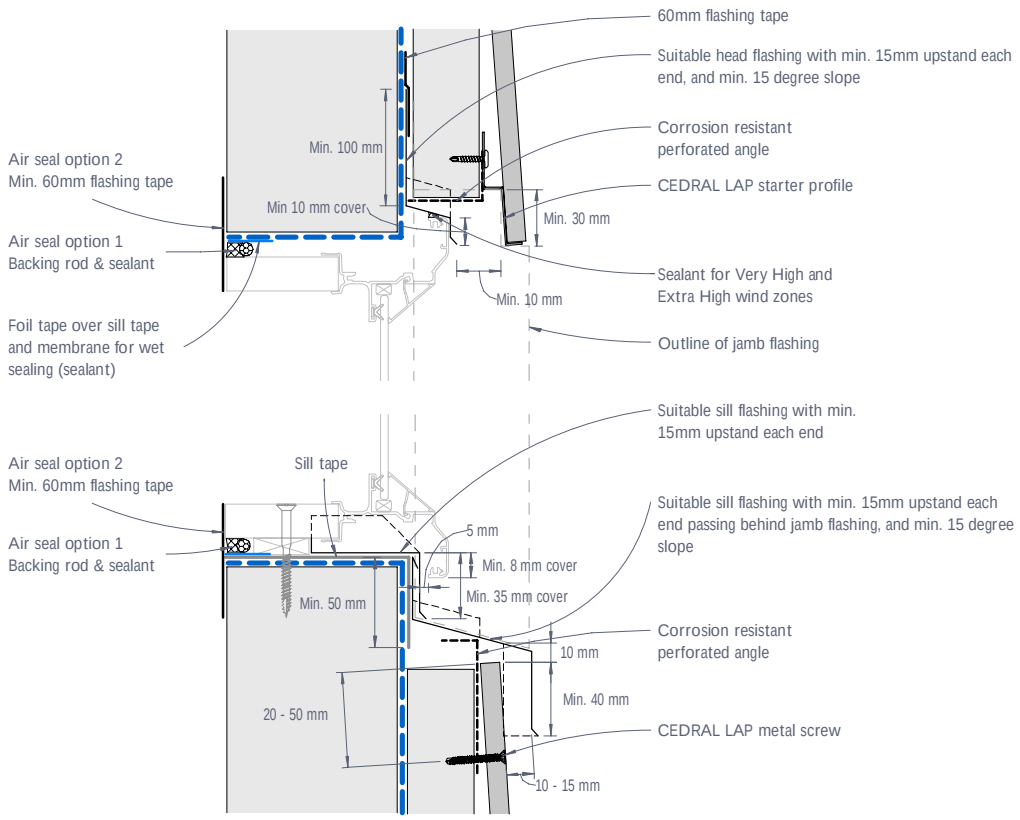

Figure 9: CEDRAL LAP window head and sill junction with CEDRAL starter profile at the head

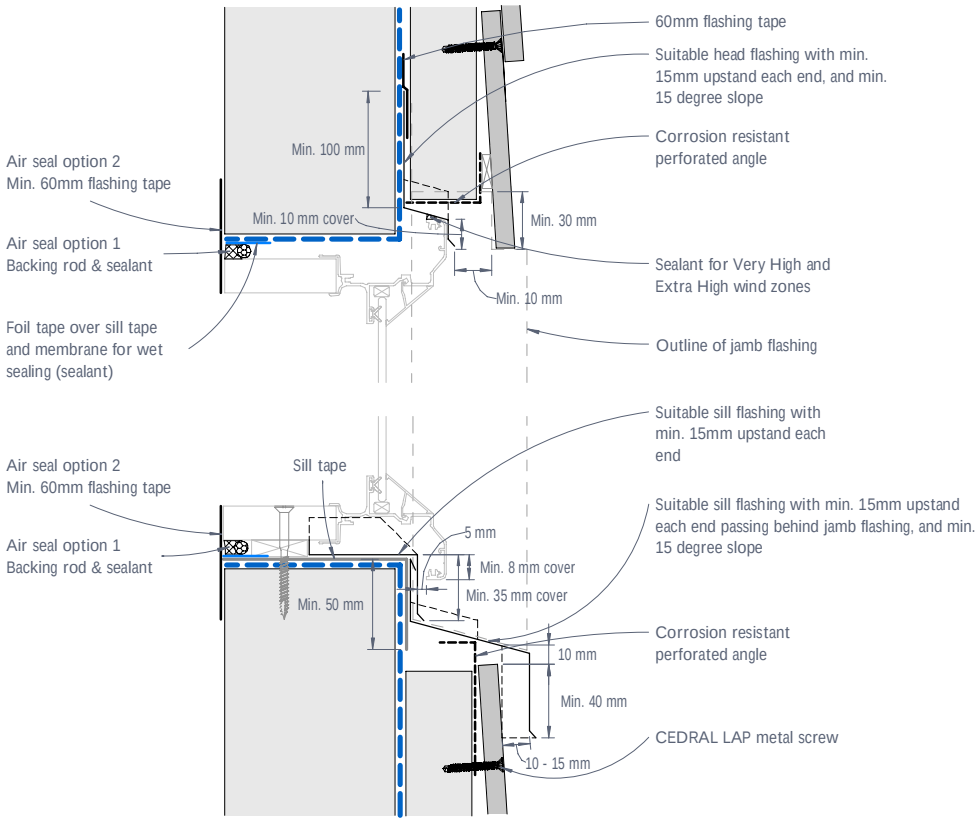

Figure 10: CEDRAL LAP window head and sill junction without CEDRAL starter profile at the head

Note

1) ONLY sealant compatible with the foil tape should be used. Should any sealant be intended to be used directly on the flashing and/or sill tape it must be confirmed with its manufacturer to ensure compatibility with these tapes in accordance with the relevant standards.

2) Corrosion resistant perforated angle shall be of max. thickness of 0.9mm where located between panel and support frame, and be of min. 50% open area.

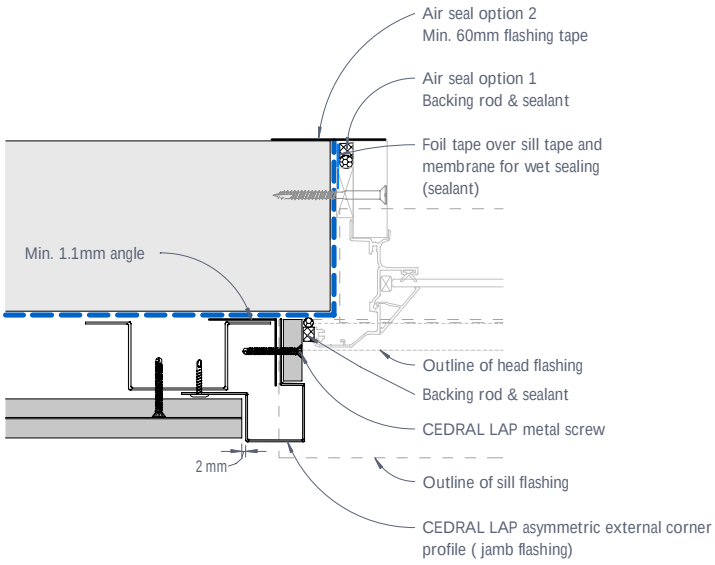

Figure 10: CEDRAL LAP window jamb junction or the like - Detail 1

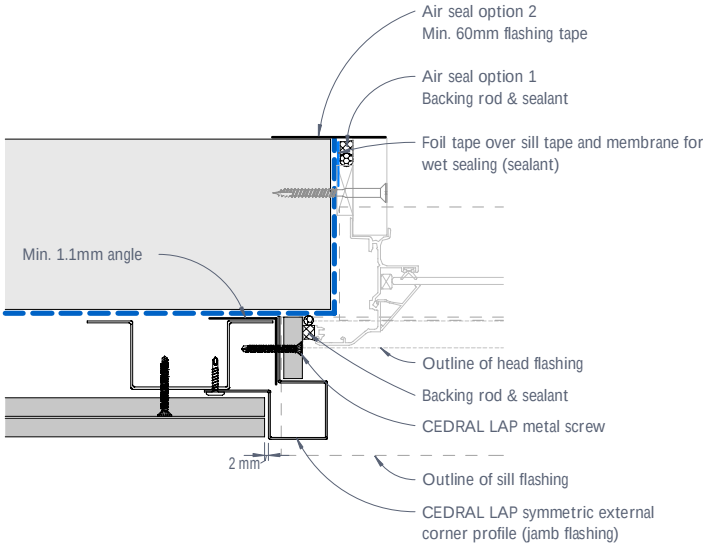

Figure 11: CEDRAL LAP window jamb junction or the like - Detail 2

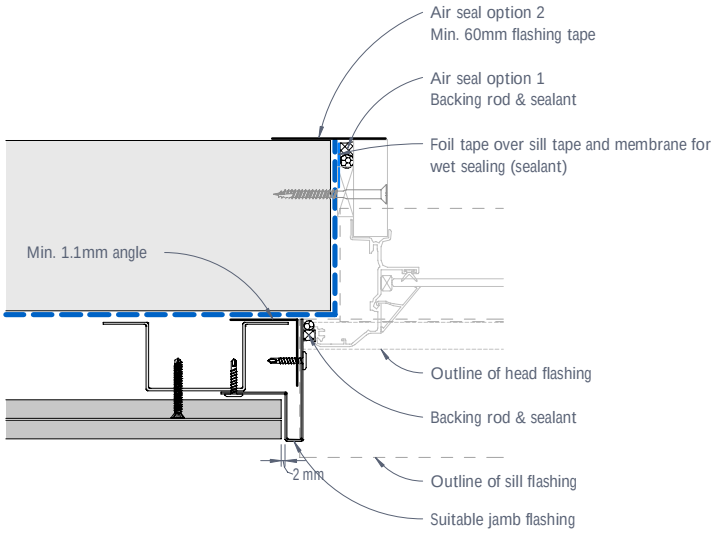

Figure 12: CEDRAL LAP window jamb junction or the like - Detail 3

Note

ONLY sealant compatible with the foil tape should be used. Should any sealant be intended to be used directly on the flashing and/or sill tape it must be confirmed with its manufacturer to ensure compatibility with these tapes in accordance with the relevant standards.

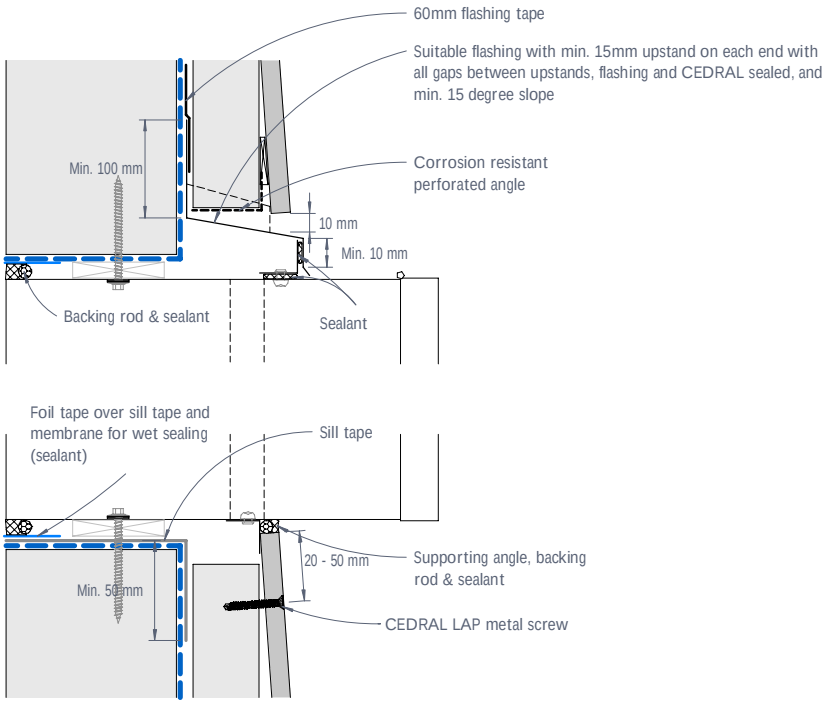

Figure 13: CEDRAL LAP meter box junction - Section

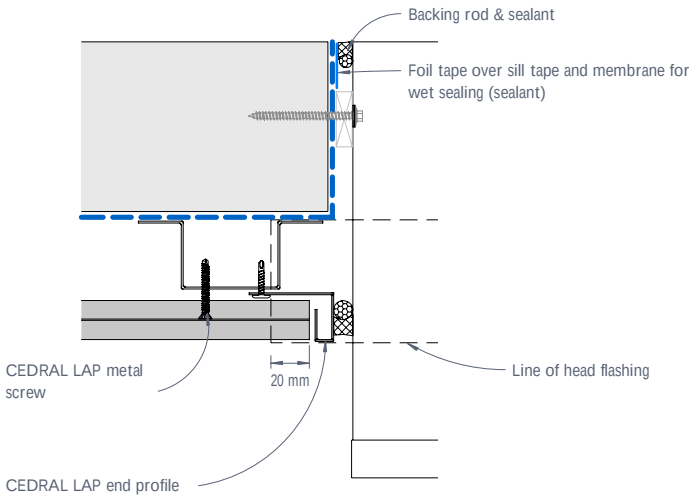

Figure 14: CEDRAL LAP meter box junction - Plan view

Notes

1) ONLY sealant compatible with the foil tape should be used. Should any sealant be intended to be used directly on the flashing and/or sill tape it must be confirmed with its manufacturer to ensure compatibility with these tapes in accordance with the relevant standards.

2) Corrosion resistant perforated angle shall be of max. thickness of 0.9mm where located between panel and support frame, and be of min. 50% open area.

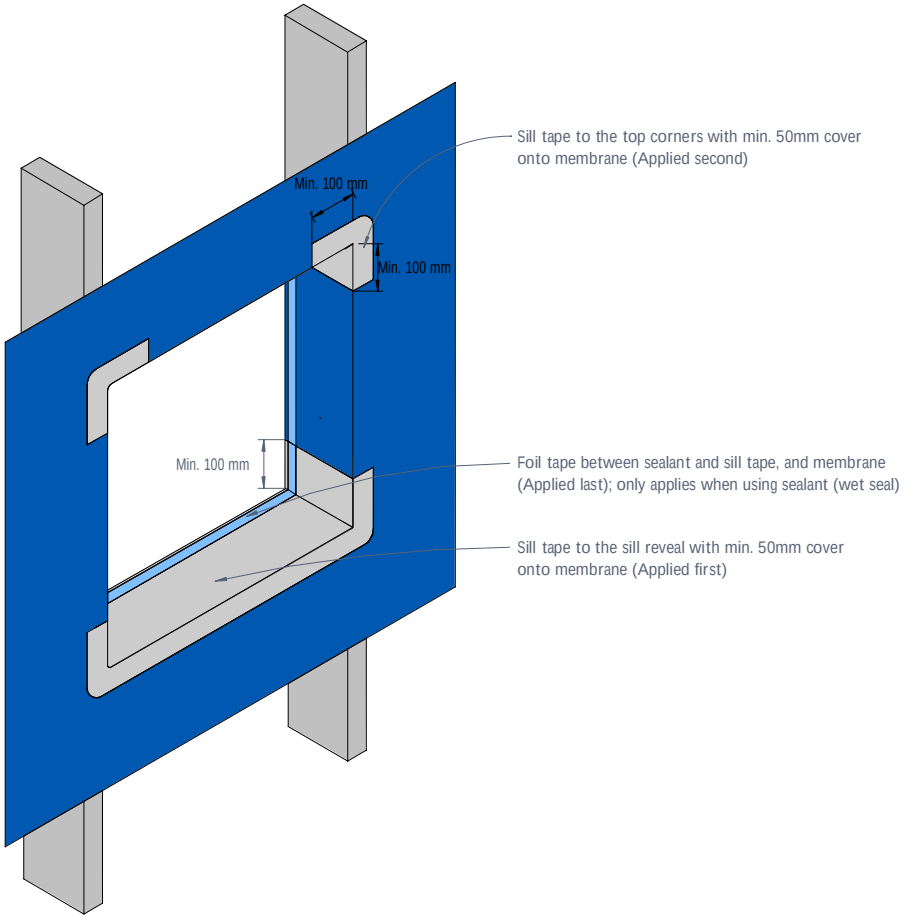

Figure 15: Isometric view of window/meter box opening - Tape application

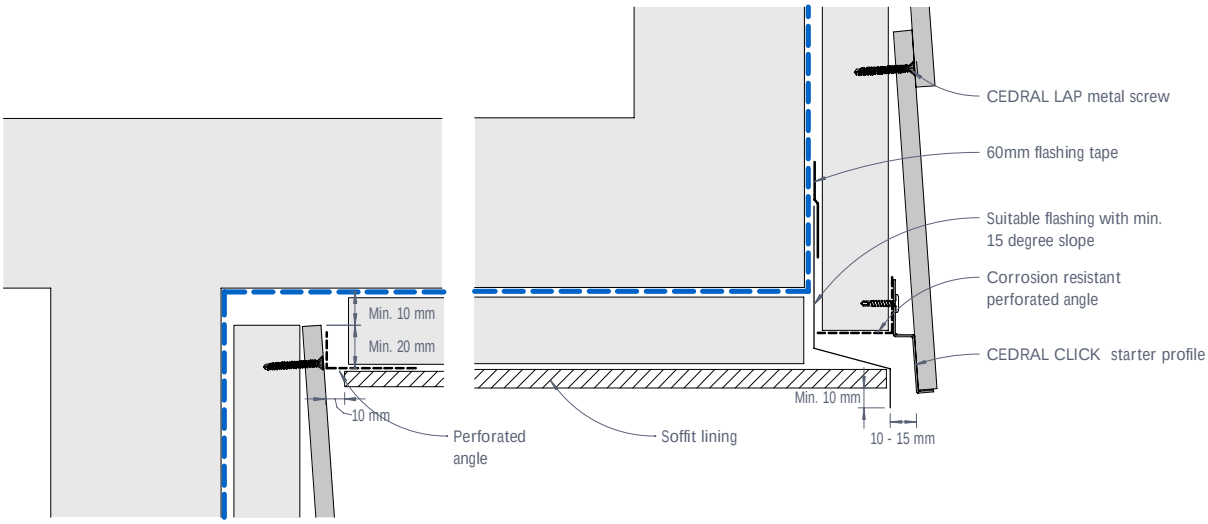

Figure 16: CEDRAL LAP soffit junction

Notes

1) ONLY sealant compatible with the foil tape should be used. Should any sealant be intended to be used directly on the flashing and/or sill tape it must be confirmed with its manufacturer to ensure compatibility with these tapes in accordance with the relevant standards.

2) Support frame (battens) must NOT be fixed crossing over a control joint.

3) Corrosion resistant perforated angle shall be of max. thickness of 0.9mm where located between panel and support frame, and be of min. 50% open area.

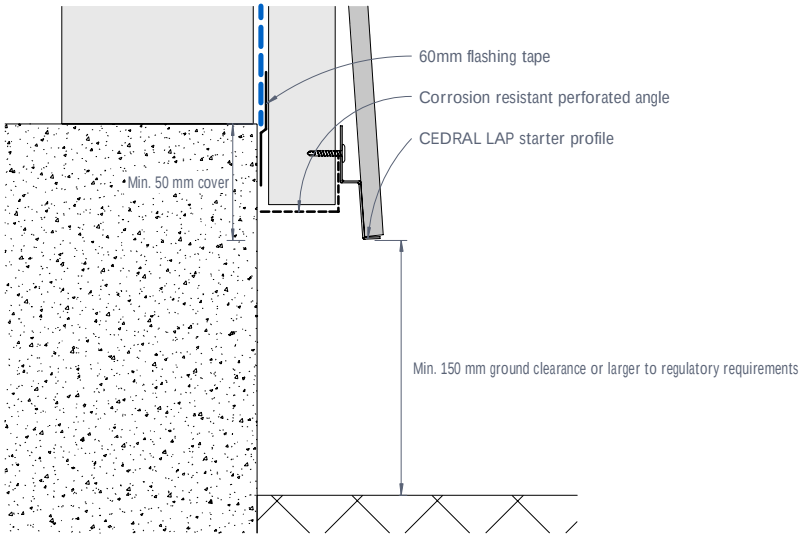

Figure 17: CEDRAL LAP base detail

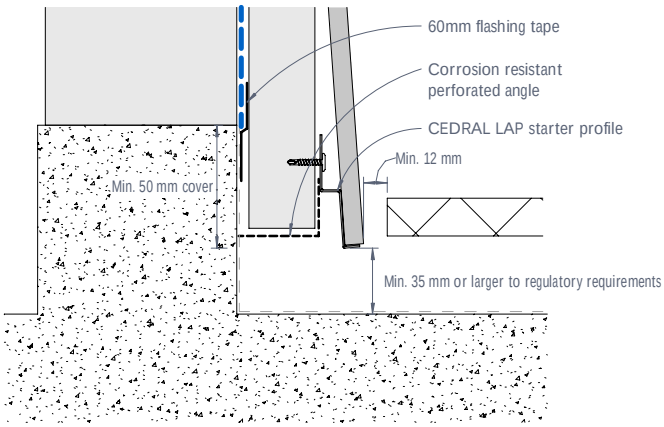

Figure 18: CEDRAL LAP base detail - Covered area

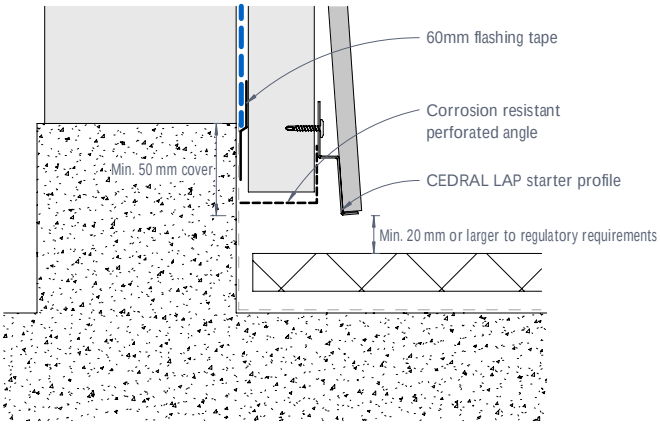

Figure 19: CEDRAL LAP base detail - Balcony

Notes

1) Corrosion resistant perforated angle shall be of max. thickness of 0.9mm where located between panel and support frame, and be of min. 50% open area.

2) Refer to pro clima's application guide for the application of the flashing tape and any pre-treatment required on various substrates including concrete and masonry.

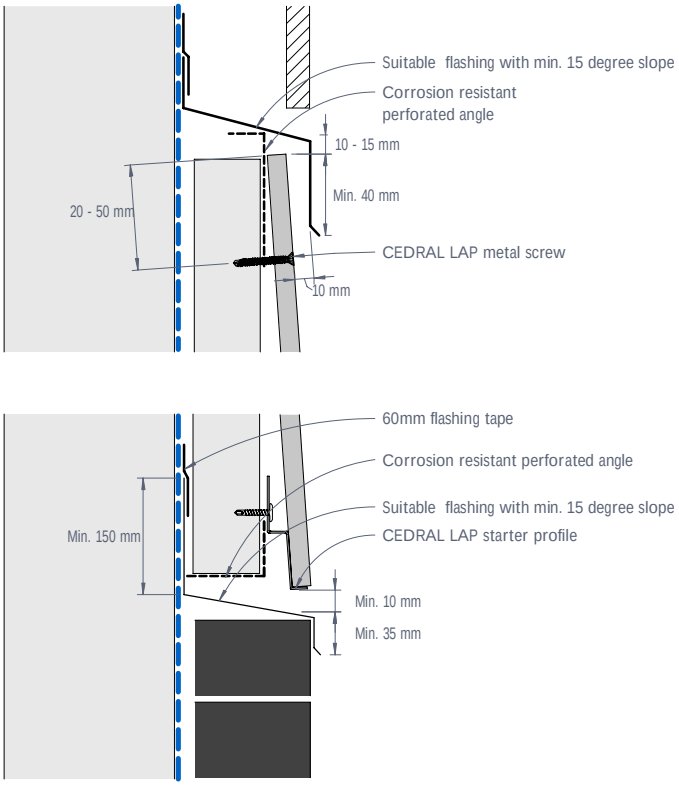

Figure 20: CEDRAL LAP junction with other materials - Flush detail

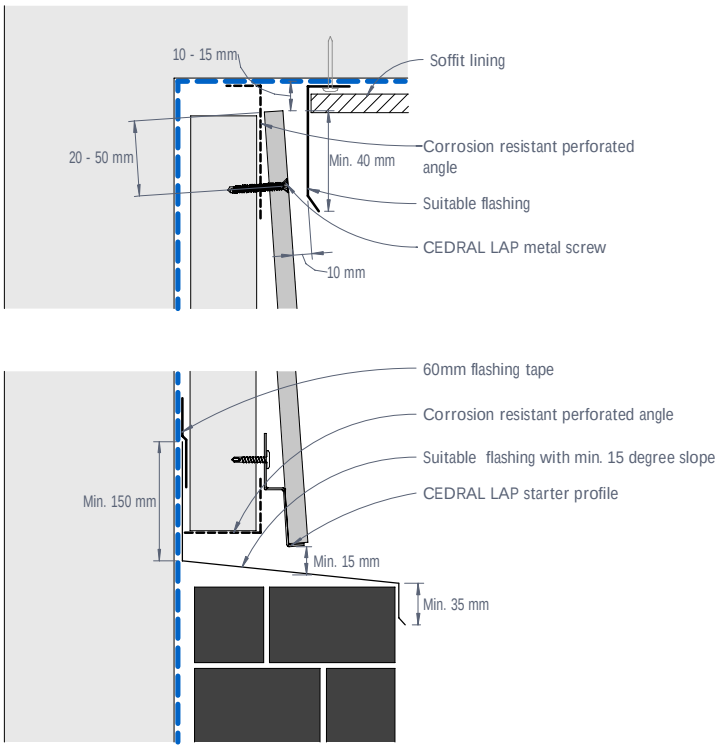

Figure 21: CEDRAL LAP junction with other materials, eaves or the like - Recessed detail

Notes

1) Support frame (battens) must NOT be fixed crossing over a control joint.

2) Corrosion resistant perforated angle shall be of max. thickness of 0.9mm where located between panel and support frame, and be of min. 50% open area.

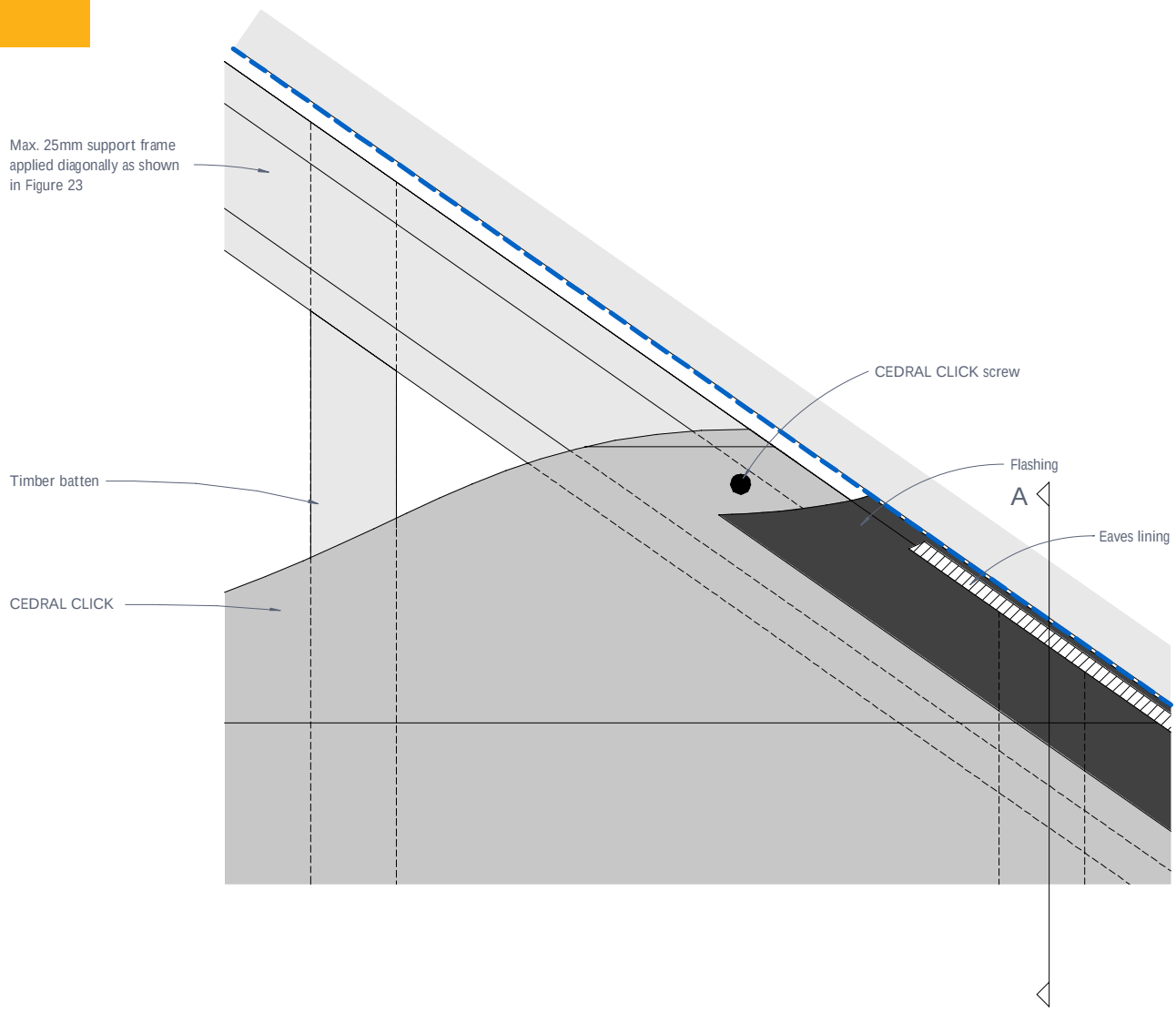

Figure 22: CEDRAL LAP junction with angled eave - Elevation

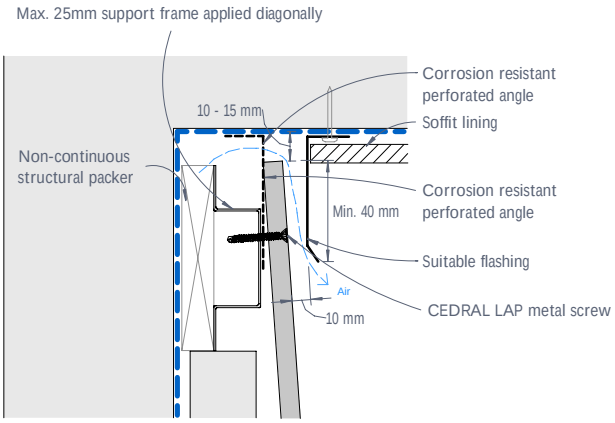

Figure 23: CEDRAL LAP junction with angled eave - Section A

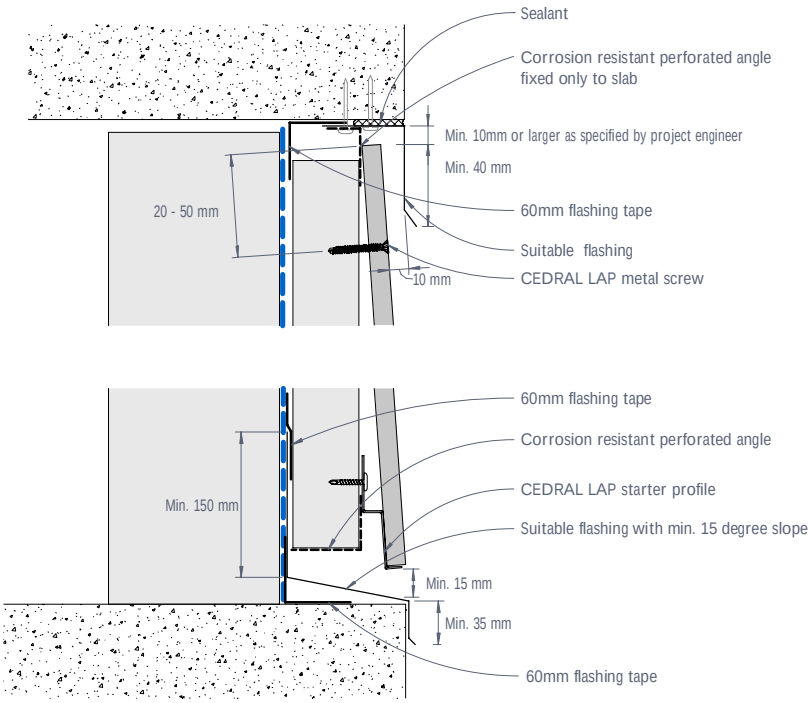

Figure 24: CEDRAL LAP junction with exposed concrete slab or beam - Cladding flush

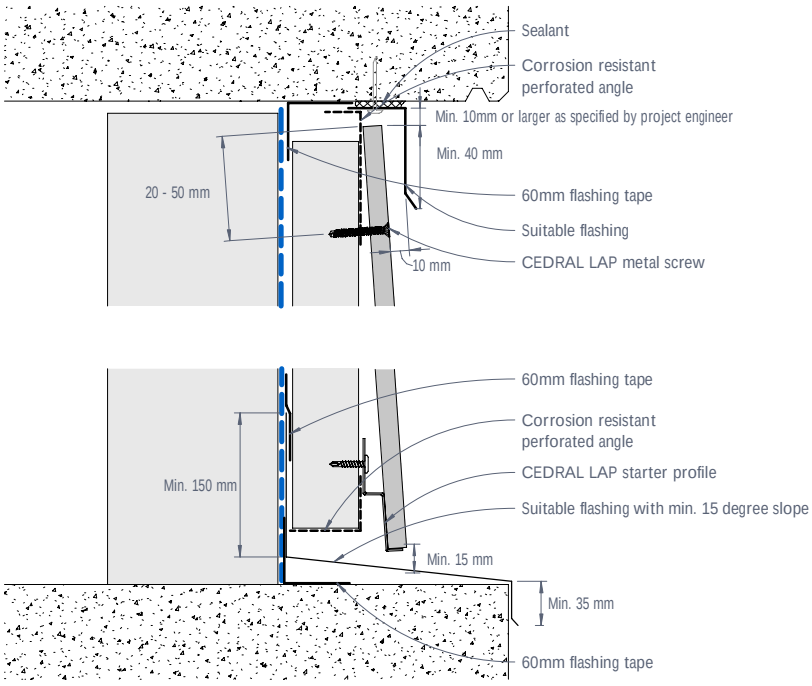

Figure 25: CEDRAL LAP junction with exposed concrete slab or beam - Cladding recessed

Notes

1) Support frame (battens) must NOT be fixed crossing over a control joint.

2) Corrosion resistant perforated angle shall be of max. thickness of 0.9mm where located between panel and support frame, and be of min. 50% open area.

3) Refer to pro clima's application guide for the application of the flashing tape and any pre-treatment required on various substrates including concrete and masonry.

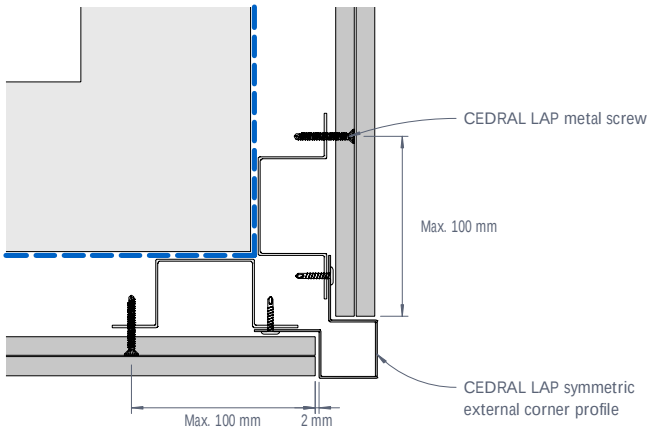

Figure 26: CEDRAL LAP typical external corner

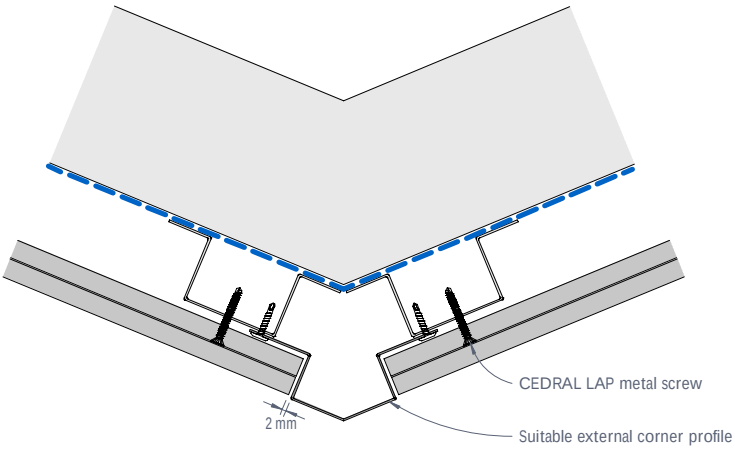

Figure 27: CEDRAL LAP 45 degree external corner

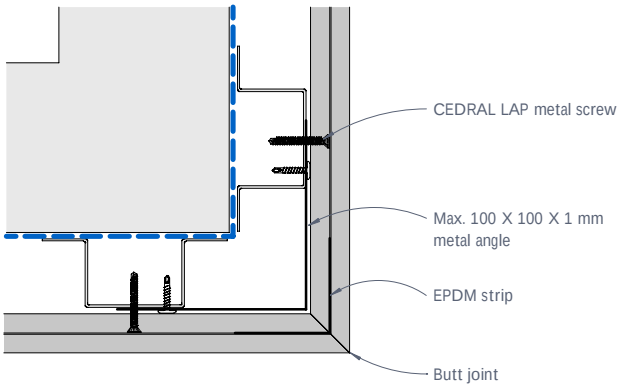

Figure 28: CEDRAL LAP mitered external corner

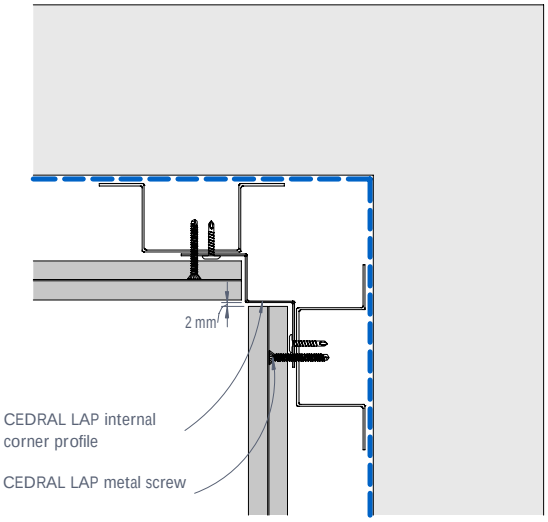

Figure 29: CEDRAL LAP internal corner

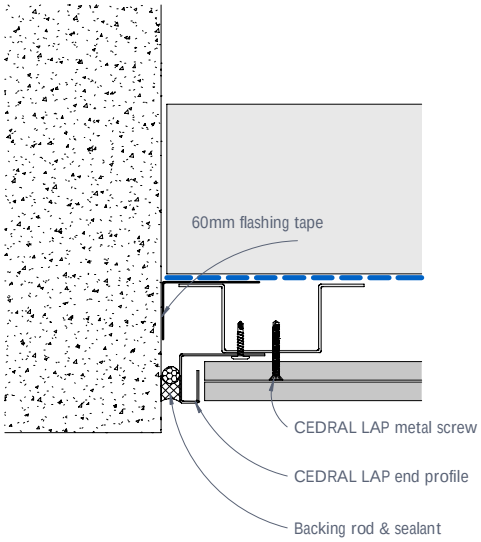

Figure 30: CEDRAL LAP abutment detail

Note

Refer to pro clima's application guide for the application of the flashing tape and any pre-treatment required on various substrates including concrete and masonry.

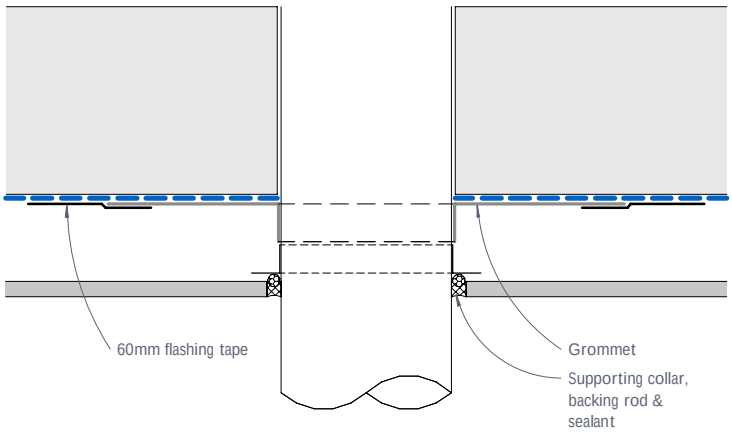

Figure 31: Pipe penetration - Plan view

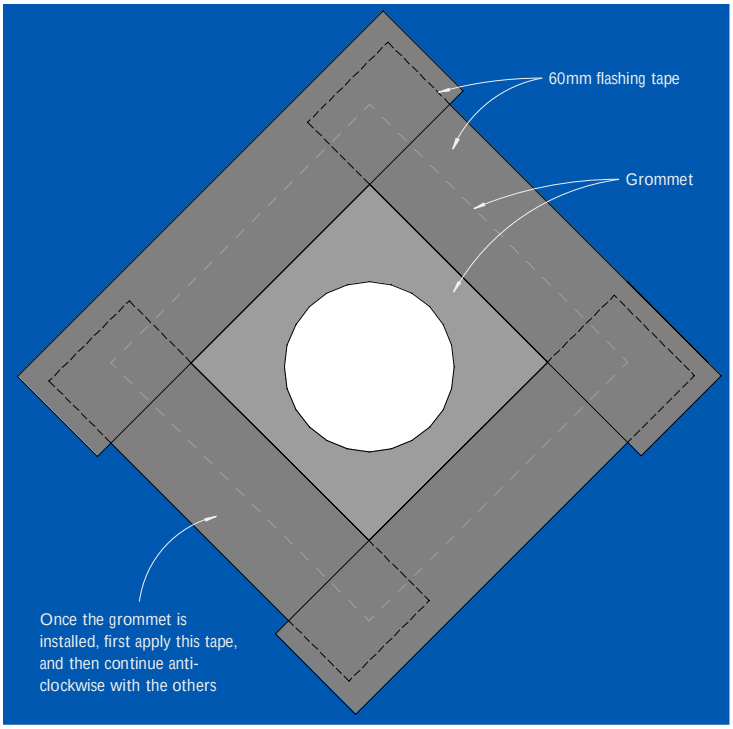

Figure 32: Pipe penetration - Elevation

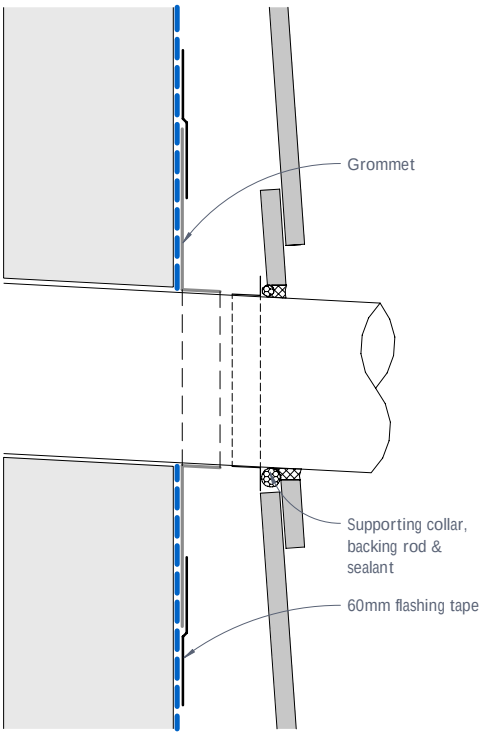

Figure 33: Pipe penetration - Section

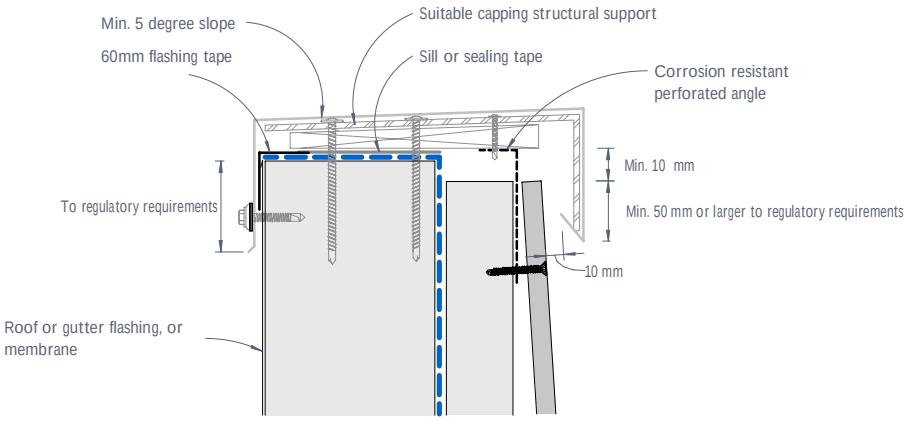

Figure 34: CEDRAL LAP typical capping detail

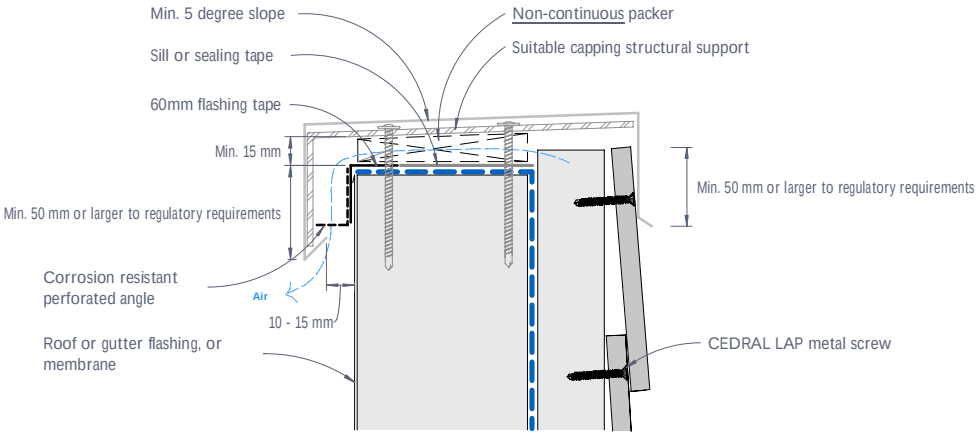

Figure 35: CEDRAL LAP flush capping detail

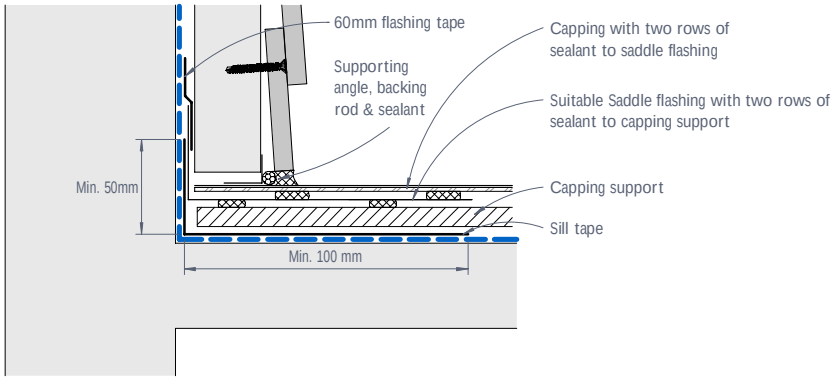

Figure 36: CEDRAL LAP parapet junction - Section

Notes

1) Capping profiles are indicative and for illustration purposes.

2) Any face fixings of capping shall be through an over sized hole (by min 5mm) in the capping as well as the panel.

3) Capping shall be designed and engineered accordingly to provide adequate allowance for ventilation as shown in Figures 34 & 35.

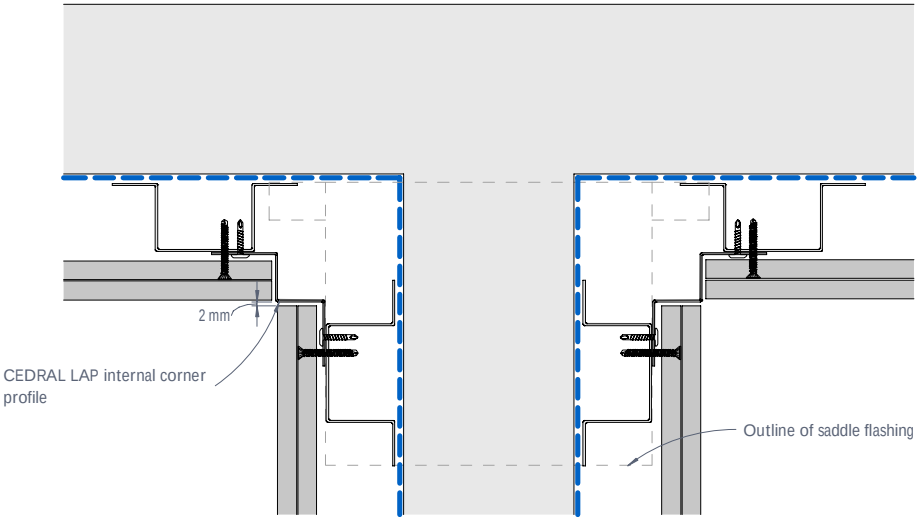

Figure 37: Parapet junction - Plan view

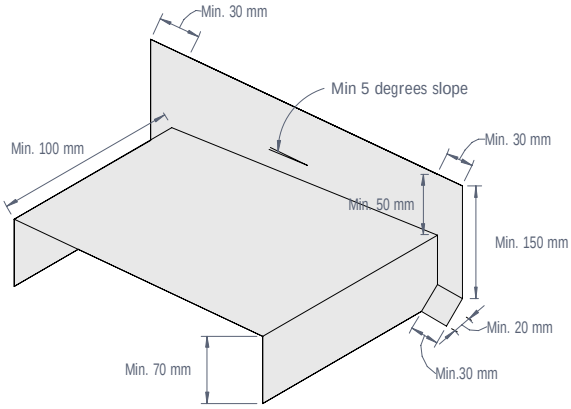

Figure 38: Suitable saddle flashing

Ed. 1 NOV2020

CEDRAL

etex inspiring ways of living

Etex Exteriors ANZ
Suite 201
198 Harbour Esplanade
Docklands VIC 3008
Australia

+61 (03) 9988 2290
info.anz@cedral.world
cedral.world